RC8 B4.2e TEAM KIT

1:8 Scale 4WD Electric Off Road Competition Buggy Kit

TEAM ASSOCIATED

1:8 Scale 4WD Electric Off Road Competition Buggy Kit Manual

#80955 RC10B4.2e Team Kit

WeAreAE

CHAMPIONS by DESIGN

AssociatedElectrics.com

TEAM ASSOCIATED

:: Introduction

Thank you for purchasing this Team Associated product. This assembly manual contains instructions and tips for building and maintaining your new Kit. Please take a moment to read through this manual to help familiarize yourself with these steps.
We are continually changing and improving our designs; therefore, actual parts may appear slightly different than in the illustrations. New parts will be noted on supplementary sheets located in the appropriate parts bags.
Check each bag for these sheets before you start to build.

:: KIT Features

Features in the RC8B4.2e Kit:

- New molded height-adjustable gearboxes front and rear
- New offset hubs and updated rear suspension arms to accommodate new hub geometry
- New high-volume center differential
- New high-downforce wing
- Now includes FT hard-anodized aluminum shock bushings
- RWB/FWB adjustable weight bias chassis
- Soft blend material suspension arms
- 8-degree KPI steering blocks included
- 44/13 ring and pinion gear sets
- 92mm universal driveshafts with 17mm outdrives
- Both 19mm and 20mm diameter HTC internal differential gear sets included
- 47T machined steel spur gear included
- Centralized drivetrain and chassis configuration optimized for shorty-style batteries
- Adjustable battery tray design with hook and loop strap for retaining batteries
- Includes both stiff shock bladders and emulsion seals

:: Additional

Your new RC8B4.2e Kit comes as a kit. There are items you will need to complete your kit (refer to the website for suggestions):

- 2 or 3 channel radio/transmitter (2.4GHz recommended)
- Two 2s or One 4s LiPo Battery Pack
- Polycarbonate-specific paint
- 1:8 scale buggy tires and wheels
- Reamer / hole punch
- Transmitter batteries
- 1/8th scale sized motor
- Thread-locking compound
- CA (cyanoacrylic) glue
- Ride height gauge
- Steering servo
- 1/8th scale sized ESC
- Needle-nose pliers
- Hobby knife

:: Other Helpful Items

- Silicone Shock/Diff Fluids (Refer to the website for complete listings):
- Shock Pliers
- Reamer / Hole Punch - (#1499)
- Ride Height Gauge
- FT Hex Wrenches - (#1506, 1518)
- Wire Cutters
- Turnbuckle Wrench - (#1114)
- Body Scissors (AE #1737)
- FT Hex Wrenches / Nut Drivers - (#1519)
- Calipers or a Precision Ruler
- Wheel Nut Wrench 17mm - (#1571)

Associated Electrics, Inc.
21062 Bake Parkway
Lake Forest, CA 92630

Customer Service
Tel: 949.544.7500
Fax: 949.544.7501

http://www.RC10.com · http://twitter.com/Team_Associated · http://www.instagram.com/teamassociatedrc/ · http://www.facebook.com/TeamAssociated/

:: Hardware - 1:1 Scale View

Flat Head (fhcs)

- 2.5x6mm (4675)
- 2.5x8mm (31448)
- 3x5mm (31540)
- 3x6mm (31541)
- 3x8mm (25201)
- 3x10mm (25202)
- 3x12mm (25203)
- 3x14mm (89208)
- 3x30mm (89212)
- 4x10mm (81262)
- 4x12mm (89214)
- 4x14mm (89217)
- 4x16mm (81263)
- 4x20mm (81264)

Socket Head (shcs)

- 2x5mm (31511)
- 2x16mm (7184)
- 3x10mm (25620)
- 3x12mm (89454)
- 3x24mm (89225)
- 3x26mm (89226)
- 3x28mm (89227)

Button Head (bhcs)

- 2.5x6mm (31520)
- 2.5x8mm (31521)
- 2.5x18mm (81259)
- 3x6mm (31531)
- 3x8mm (31532)
- 3x10mm (25211)
- 3x12mm (89202)
- 3x14mm (25187)
- 3x16mm (89203)
- 3x18mm (2308)
- 3x20mm (25188)
- 3x22mm (25189)
- 3x24mm (89204)
- 4x14mm (81260)
- 4x16mm (81261)

LP Socket Head (lp shcs)

- 3x6mm (41089)
- 3x10mm (41090)
- 3x14mm (41094)
- 3x16mm (41093)
- 3x20mm (41091)

Set Screws

- 3x3mm (25225)
- 3x6mm (81257)
- 3x10mm (4671)
- 3x12mm (81258)
- 4x4mm (7732)
- 5x4mm (89221)

Ball Bearings

- 5x8x2.5mm (8680)
- 5x10x4mm (91560)
- 6x10mm (31404)
- 6x12x4mm (91561)
- 8x16x5mm (91564)
- 8x16x5mm flanged (91565)

Nuts (lock/plain)

- M3 Nut (91477)
- M3 Alum. Locknut, Blue (31550)
- M3 Locknut, Black (25215)
- M3 Locknut w/Flange (25612)
- FT 3mm Locknuts, Blue(25392)
- FT M4 Locknut, Blue (31551)
- M4 Locknut, Serrated (91738)

:: Table of Contents

1..... Cover

2..... Introduction

3..... 1:1 Hardware "Fold Out"

4..... Table of Contents

5 - 7.....Differentials Build
(Bags 1.1, 1.2)

7 - 8.....Shocks Build
(Bag 2.1)

9.....Turnbuckles Build
(Bags 3.1)

10 - 11.....Steering / Chassis Build
(Bag 4.1)

11 - 14.....Front Gearbox Build
(Bags 5.1, 5.2, 5.3)

14 - 15.....Steering Blocks Build
(Bags 6.1)

16 - 18.....Rear End Build
(Bags 7.1, 7.2, 7.3)

19.....Rear Hubs Build
(Bags 8.1, 8.2)

20 - 21.....Center Bulkhead Build
(Bag 9.1)

21 - 22.....Radio Tray Build
(Bag 10.1, 11.1)

22 - 23.....Battery Tray Build
(Bag 12.1)

24.....Wheels / Tires / Body
(Misc.)

25..... Droop Settings

26..... Back Cover

:: Notes

This symbol indicates a special note or instruction in the manual.

This symbol indicates a specific build order in the manual.

This symbol indicates a Racers Tip.

There is a 1:1 hardware foldout page in the front of the manual. To check the size of a part, line up your hardare with the correct drawing until you find the exact size. Each part in the foldout has a number assigned to it for ordering replacement parts.

Associated Electrics, Inc.
21062 Bake Parkway
Lake Forest, CA 92630

Customer Service
Tel: 949.544.7500
Fax: 949.544.7501

http://www.RC10.com • http://twitter.com/Team_Associated • http://www.instagram.com/teamassociatedrc/ • http://www.facebook.com/TeamAssociated/

:: Differential Build (Front and Rear) - Bag 1.1, 1.2 - Step 1

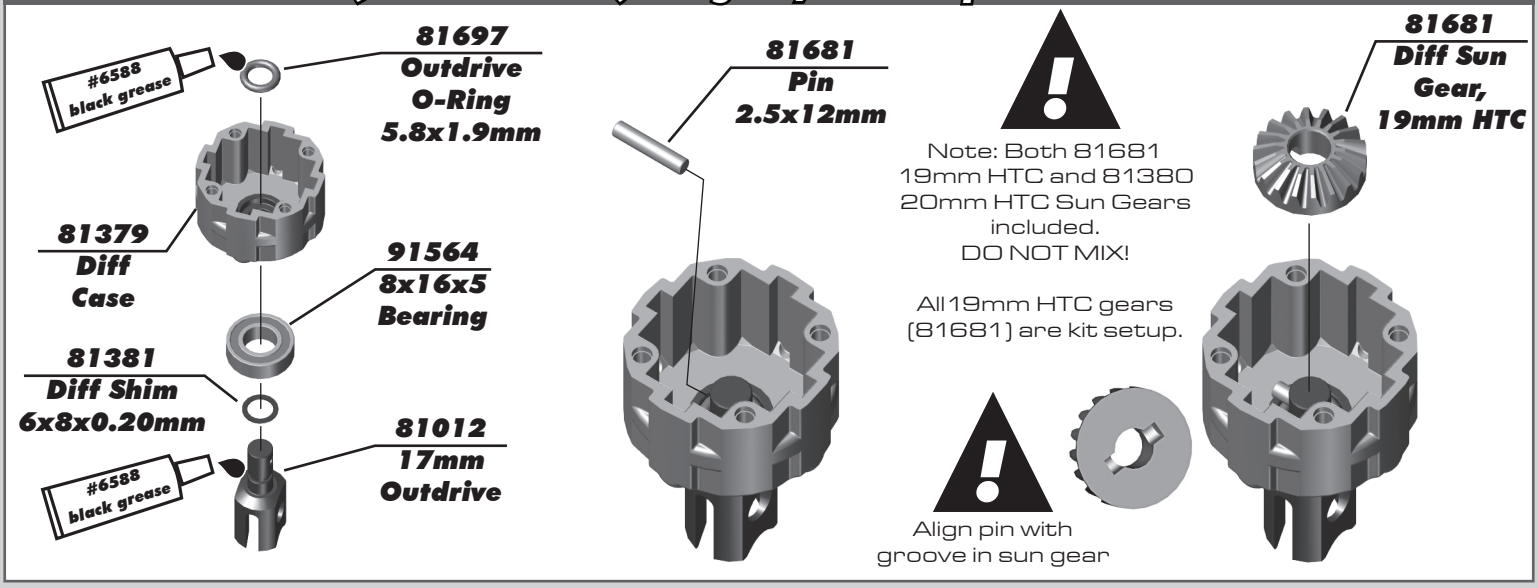

:: Differential Build (Front and Rear) - Bag 1.1, 1.2 - Step 2

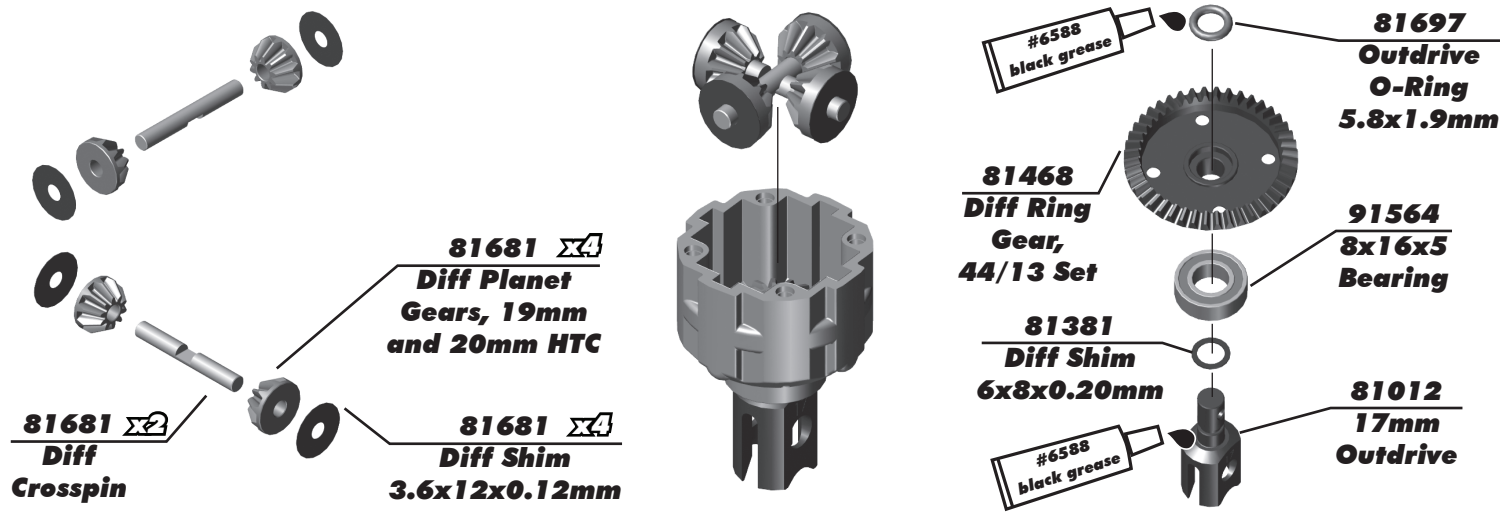

:: Differential Build (Front and Rear) - Bag 1.1, 1.2 - Step 3

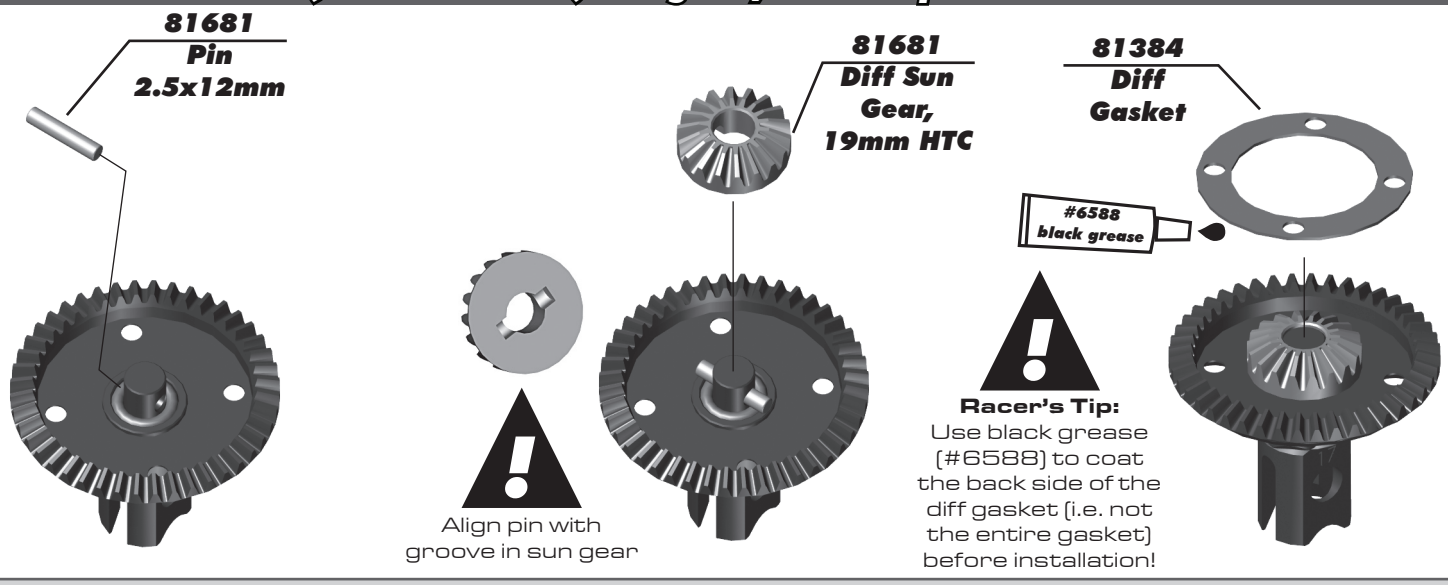

:: Differential Build (Front and Rear) - Bag 1.1, 1.2 - Step 4

Racer's Tip:
Fill diff above the cross pins, below the planet gears as shown.

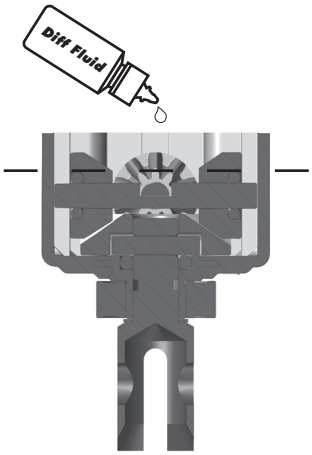

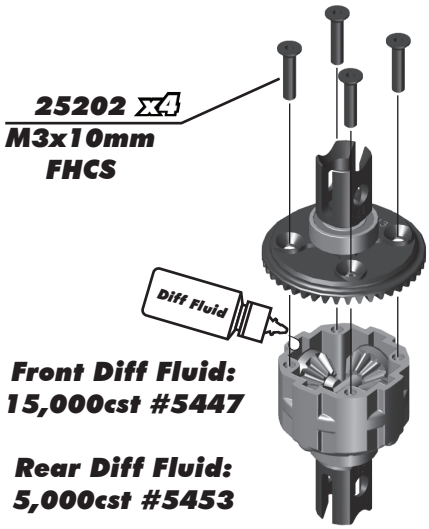

:: Differential Build (Center) - Bag 1.1, 1.2 - Step 5

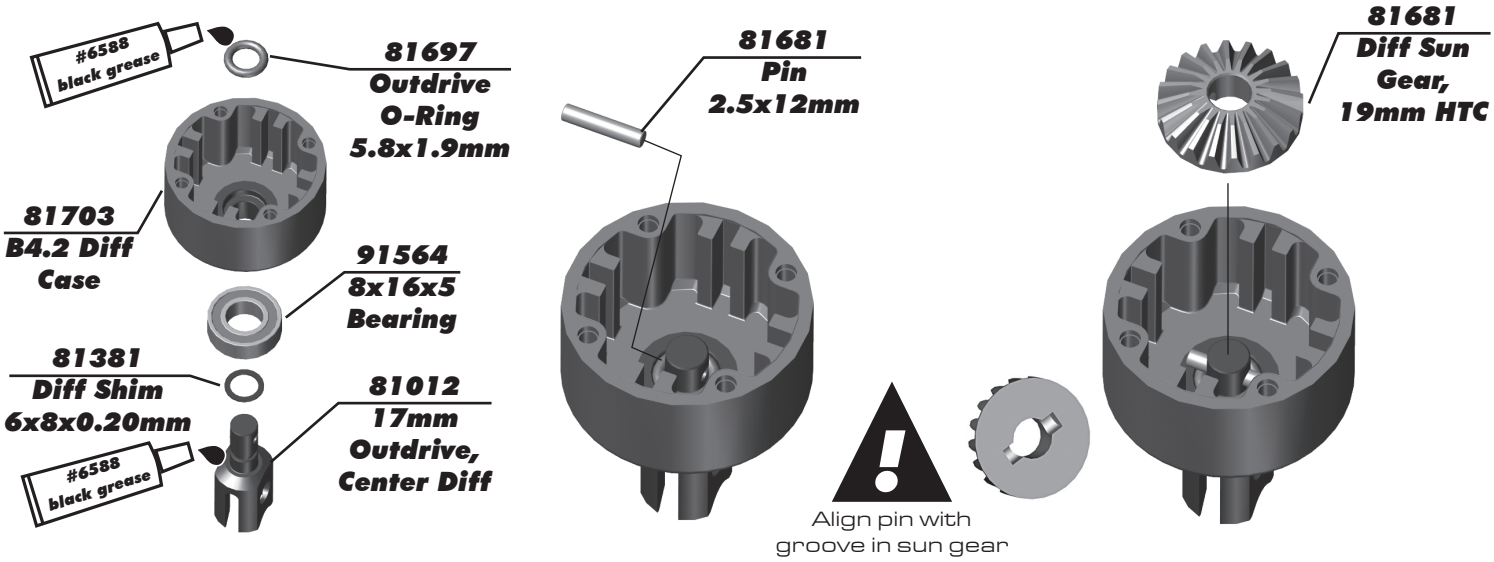

:: Differential Build (Center) - Bag 1.1, 1.2 - Step 6

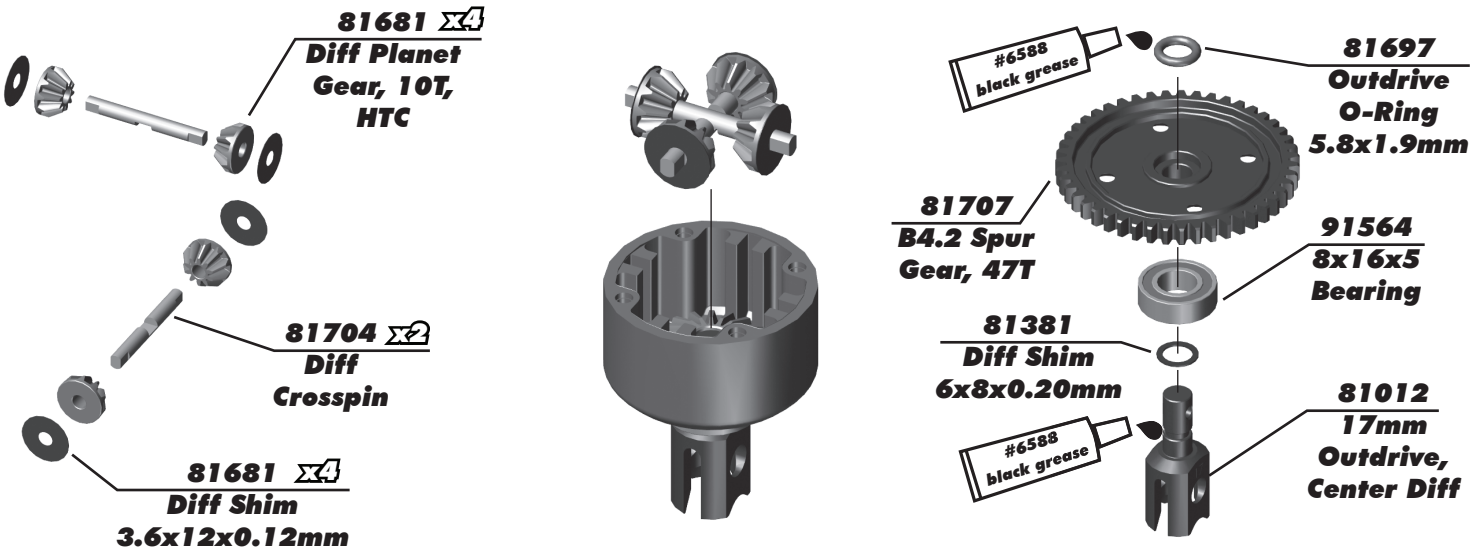

:: Differential Build (Center) - Bag 1.1, 1.2 - Step 7

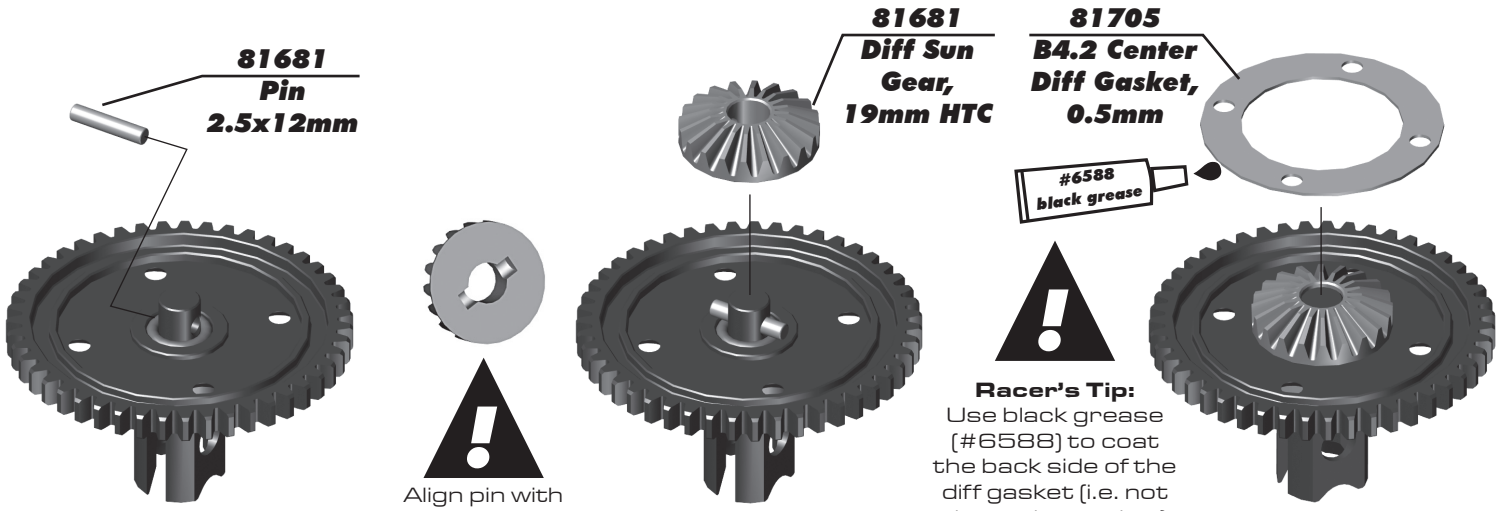

Align pin with groove in sun gear

Racer's Tip:
Use black grease (#6588) to coat the back side of the diff gasket (i.e. not the entire gasket) before installation!

:: Differential Build (Center) - Bag 1.1, 1.2 - Step 8

Racer's Tip:
Fill diff above the cross pins, below the planet gears as shown.

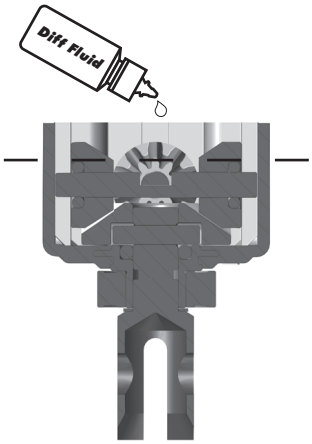

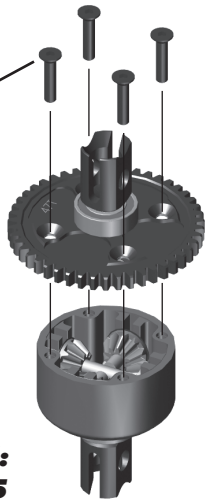

Center Diff Fluid:
10,000cst #5455

:: Shocks Build - Bag 2.1 - Step 1

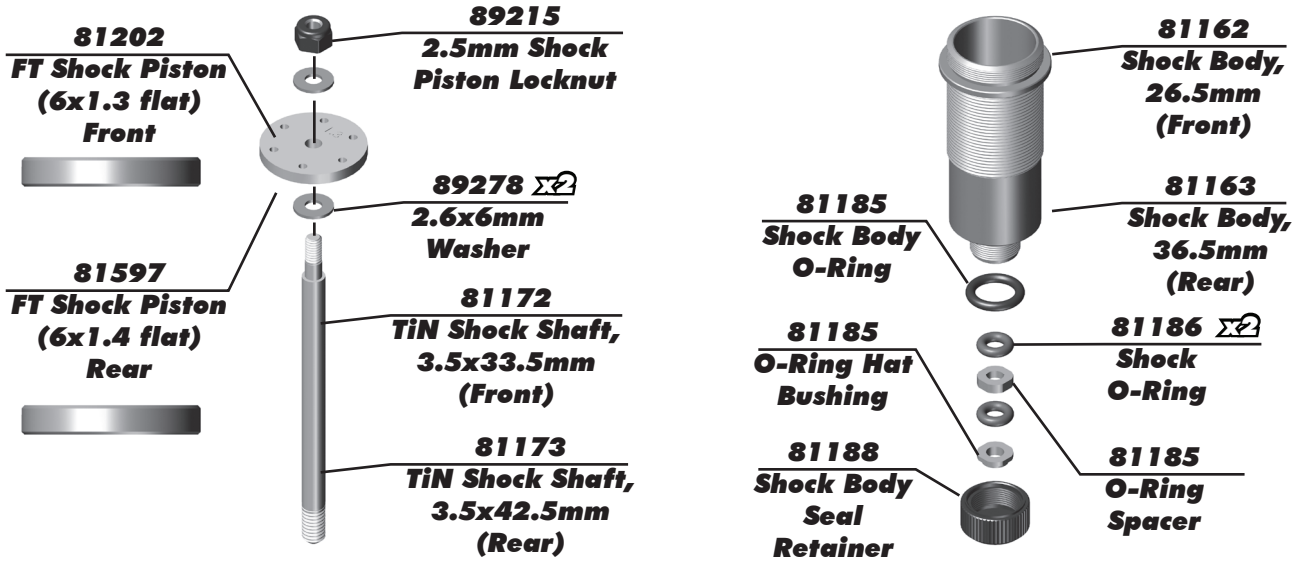

:: Shocks Build - Bag 2.1 - Step 2

Racer's Tip:
Use green slime (#1105) to lube the o-rings before installation!

81190
Shock Boots

81562
Rod End Ball

81621
Shock Rod End
Front: +2
Rear: +2

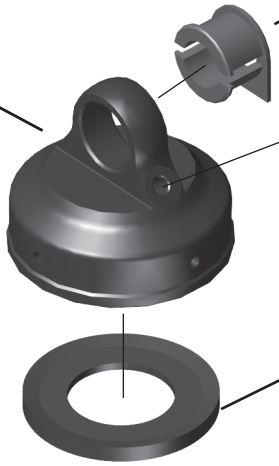

81452
RC8B3.2 Shock Cap

81512
Shock Cap Insert

91492
2x4mm BHCS

91492
Gasket (2)

81184
Emulsion Seal (1)

Option Included:
81453
16mm Stiff Bladder

When installing the emulsion seal, make sure it is correctly seated within the shock cap as shown.

:: Shocks Build - Bag 2.1 - Step 3

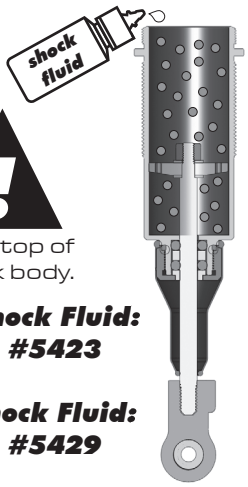

Fill to top of shock body.

Front Shock Fluid:
40wt #5423

Rear Shock Fluid:
35wt #5429

Tighten to snug, may be a small gap when sealed.

Bleed Procedure:
Remove bleeder screw
Tilt shock so bleed hole is the highest point and slowly compress the shaft.

Stop about 3mm from full compressed, install the screw, and check that the shock is not pressurized.
If so, bleed out a small amount more.

:: Shocks Build - Bag 2.1 - Step 4

The springs come with a colored marking pre-installed for easy identification

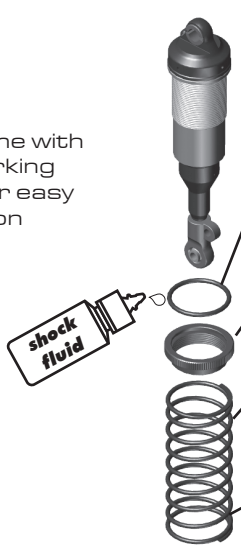

81221
Spring Collar O-Ring, 20mm

81221
Spring Collar, 20mm

81658
Front Spring, White (5.05lb/in) L68, 7.75T, 1.5D

81663
Rear Spring, Green (3.60lb/in) L83, 10.00T, 1.5D

81512
Spring Cup (1)

25211
3x10mm BHCS (2)

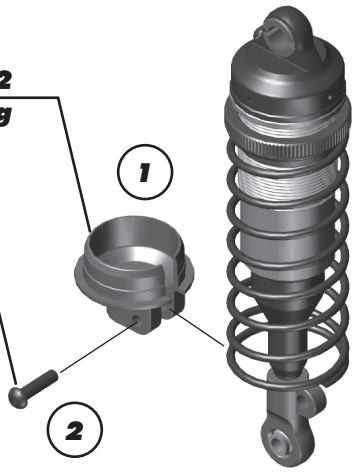

:: Turnbuckles Build - Bag 3.1- Step 1

Steering Servo Turnbuckle

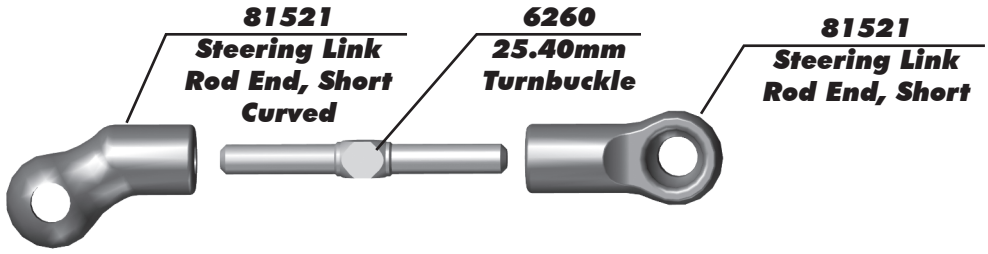

Set aside until page 22

11.50mm (0.45")

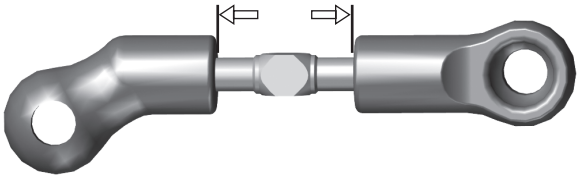

:: Turnbuckles Build - Bag 3.1 - Step 2

Steering Turnbuckle

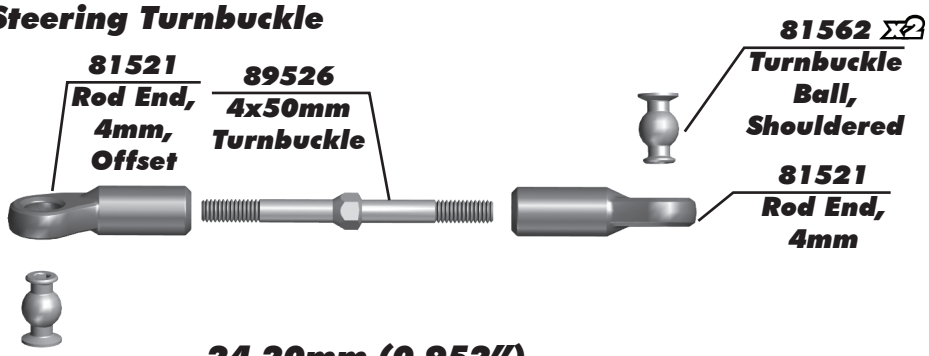

Note the direction of turnbuckle ball

Set aside until page 15

24.20mm (0.952")

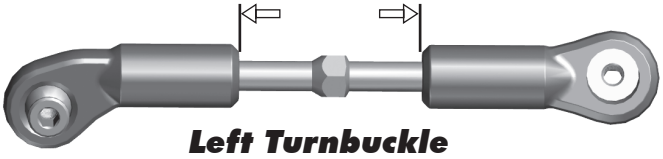

Left Turnbuckle

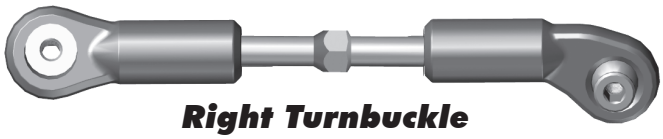

Right Turnbuckle

:: Turnbuckles Build - Bag 3.1 - Step 3

Rear Hub Turnbuckle

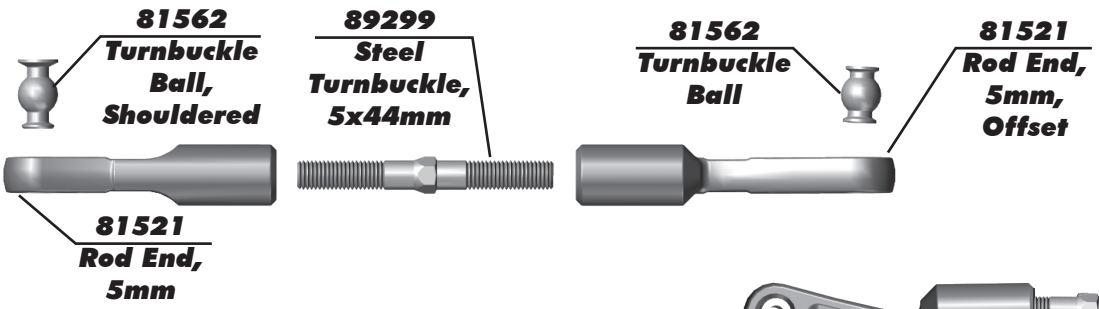

Set aside until page 19

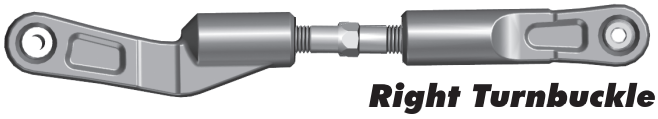

Right Turnbuckle

13.70mm (0.539")

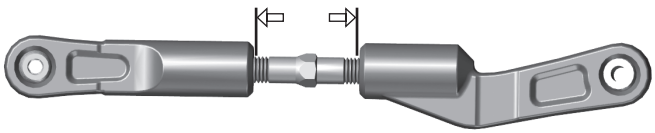

Left Turnbuckle

:: Steering / Chassis Build - Bag 4.1 - Step 1

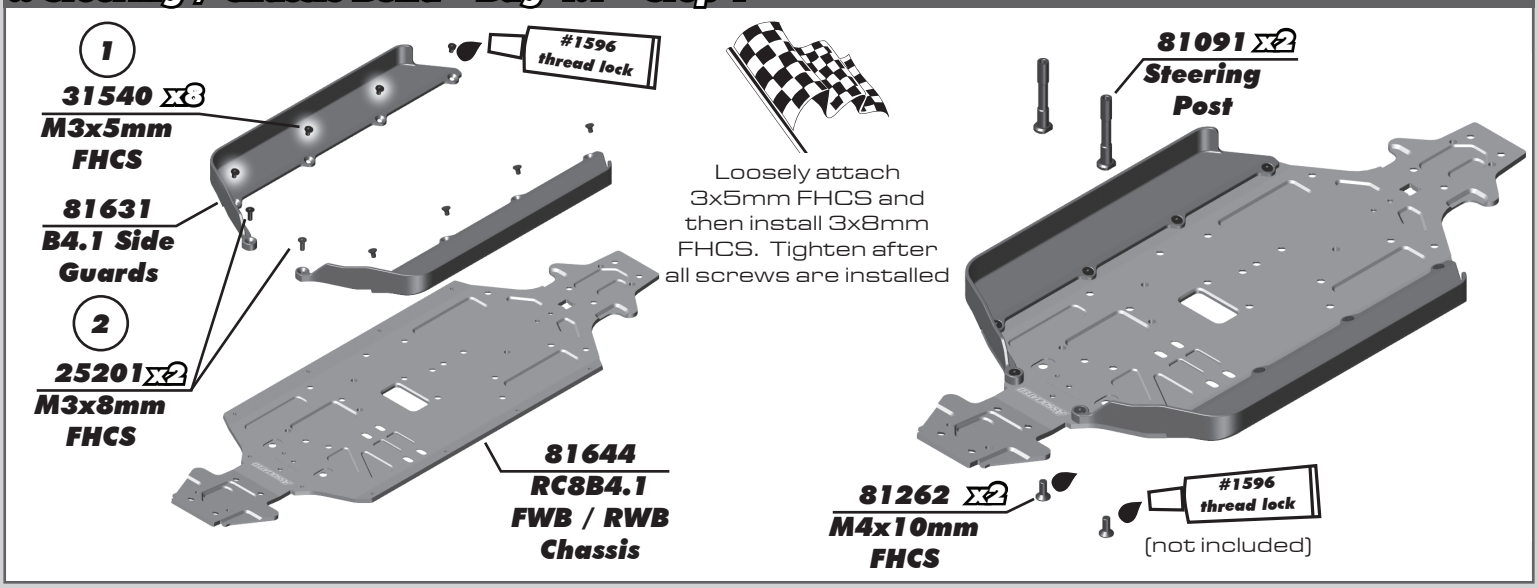

:: Steering / Chassis Build - Bag 4.1 - Step 2

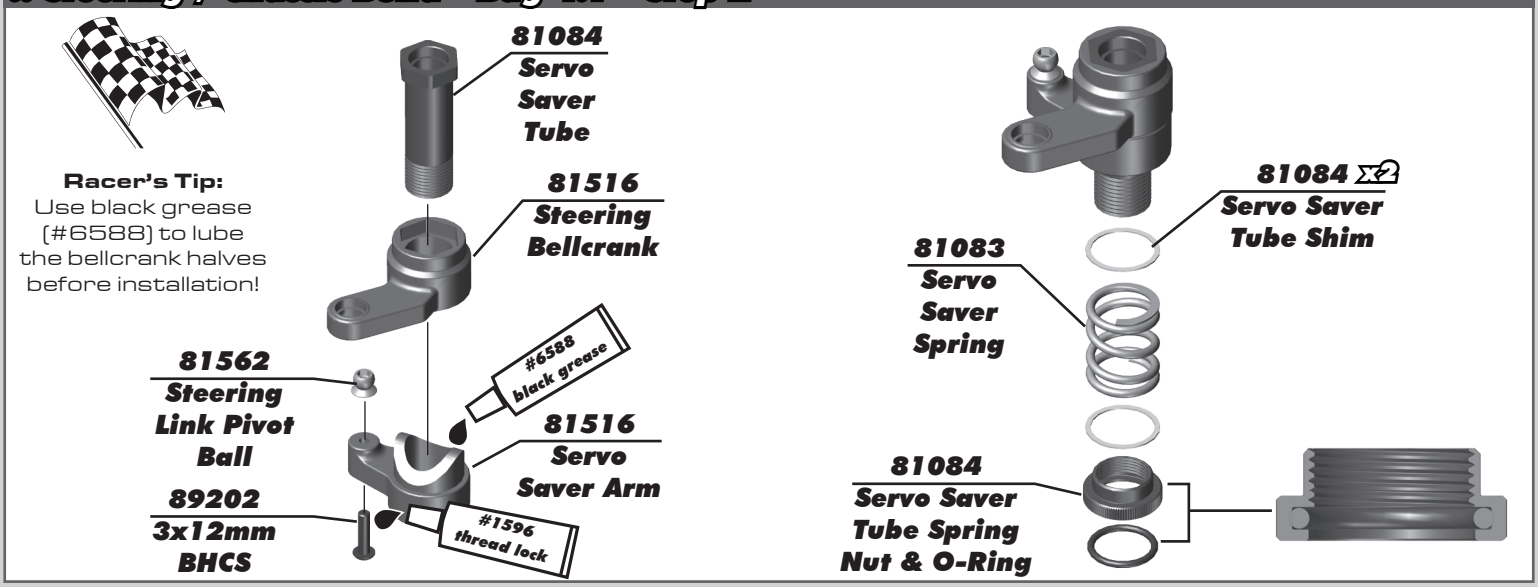

:: Steering / Chassis Build - Bag 4.1 - Step 3

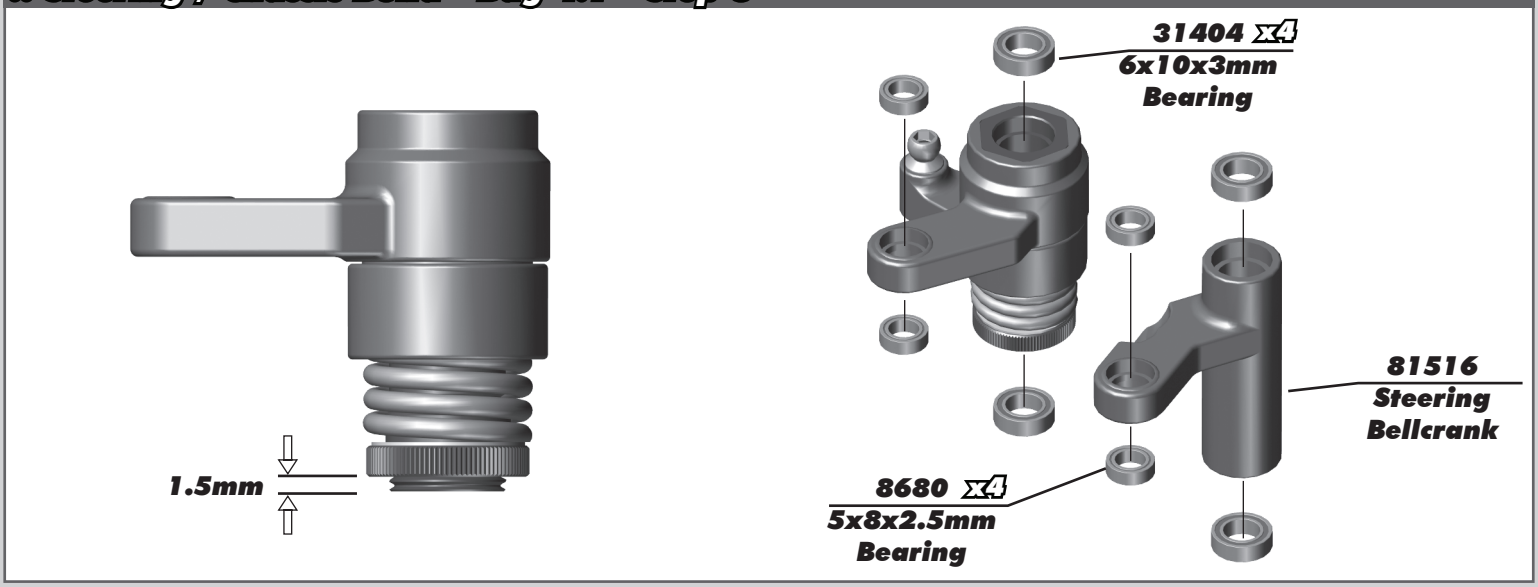

:: Steering / Chassis Build - Bag 4.1 - Step 4

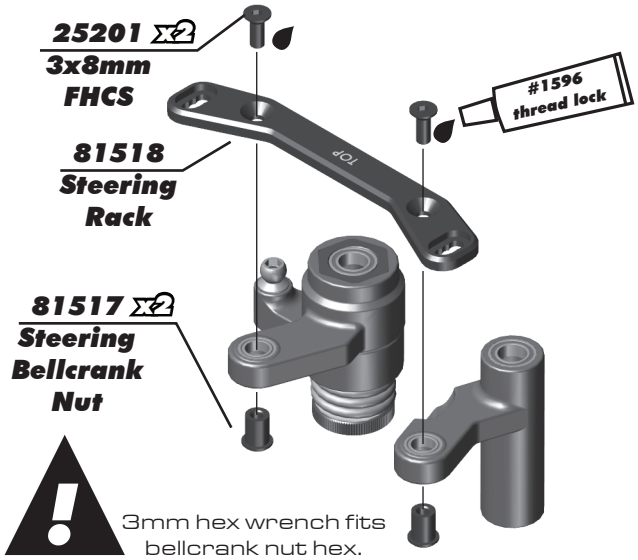

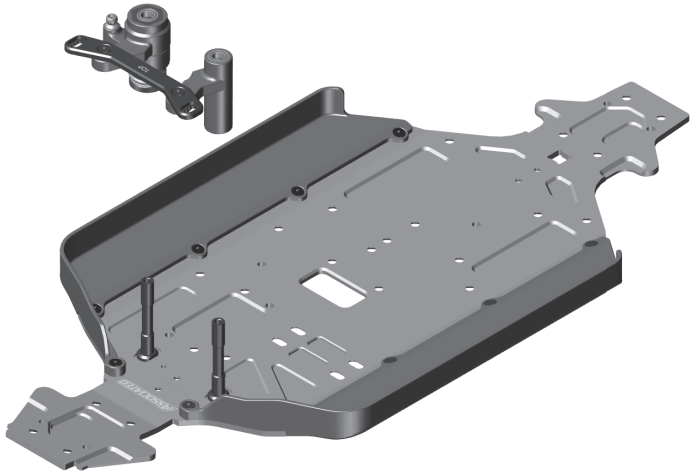

3mm hex wrench fits bellcrank nut hex.

:: Front Gearbox Build - Bag 5.1, 5.2, 5.3 - Step 1

Pinion Height Insert:
Dot at bottom = 0
No dot = +1
Dot at top = +2

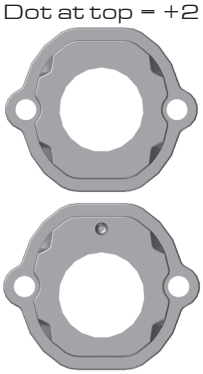

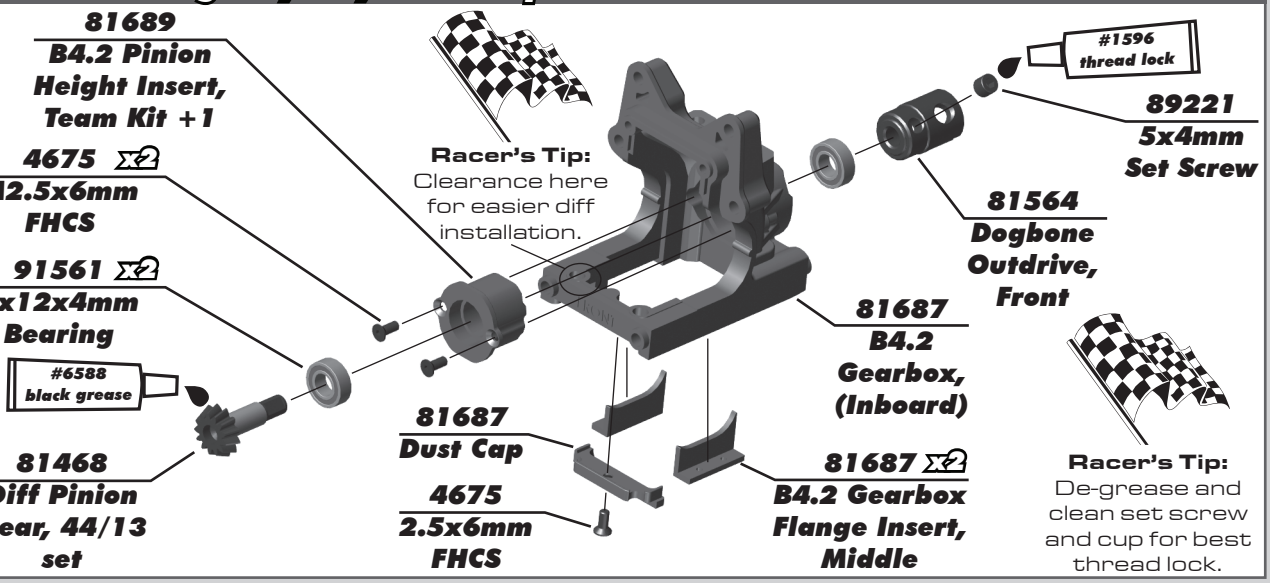

:: Front Gearbox Build - Bag 5.1, 5.2, 5.3 - Step 2

Gearbox Diff Height:
Dot at bottom = 0
No dot = +1
Dot at top = +2

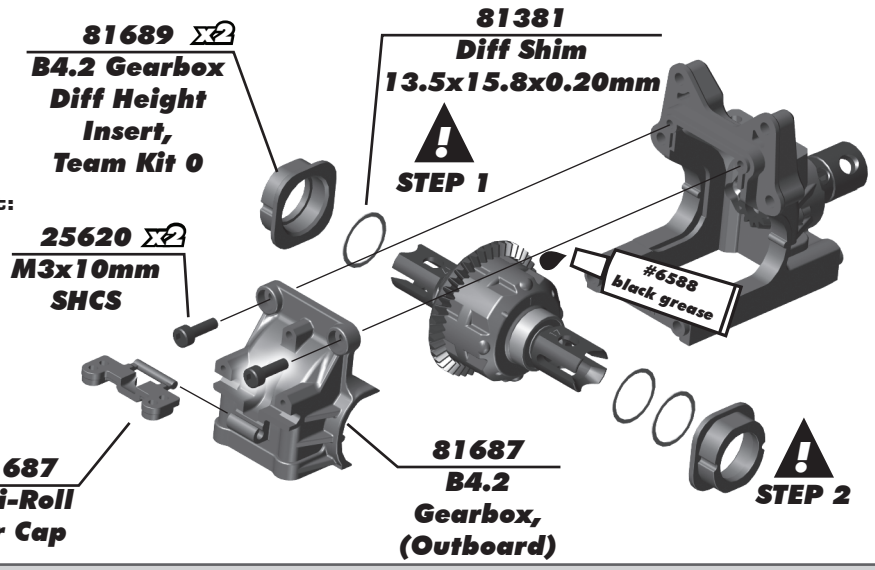

Step 1:
Add shims on the ring gear side to TIGHTEN gear mesh. Subtract shims on this side to LOOSEN gear mesh.
NOTE:
Start 1 x Thick 0.2mm

Step 2:
Add or subtract shims here to finalize diff side to side play once gear mesh is set from Step 1.
Recommended diff "side-to-side" clearance (gearbox assembly) 0.10 - 0.25mm.
Start with 1 x 0.1 mm.

Note:
0.1 mm shim can be used for fine tuning of gear mesh

:: Front Gearbox Build - Bag 5.1, 5.2, 5.3 - Step 3

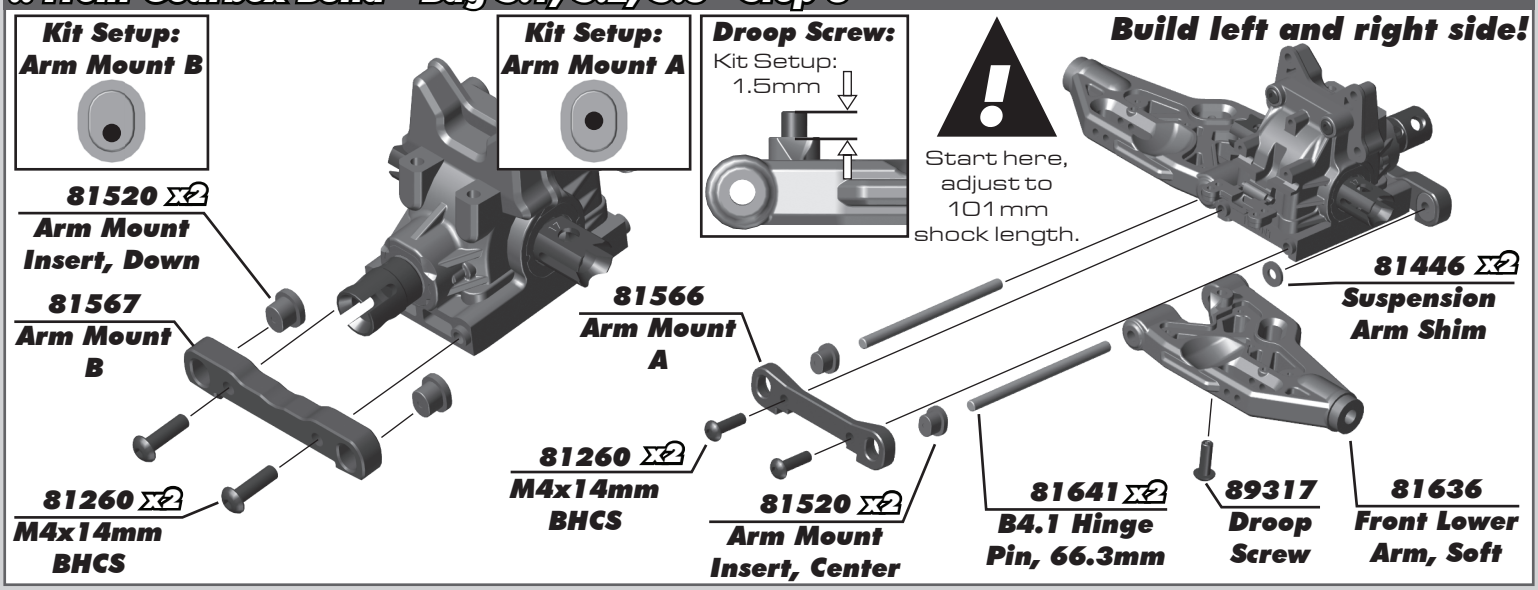

:: Front Gearbox Build - Bag 5.1, 5.2, 5.3 - Step 4

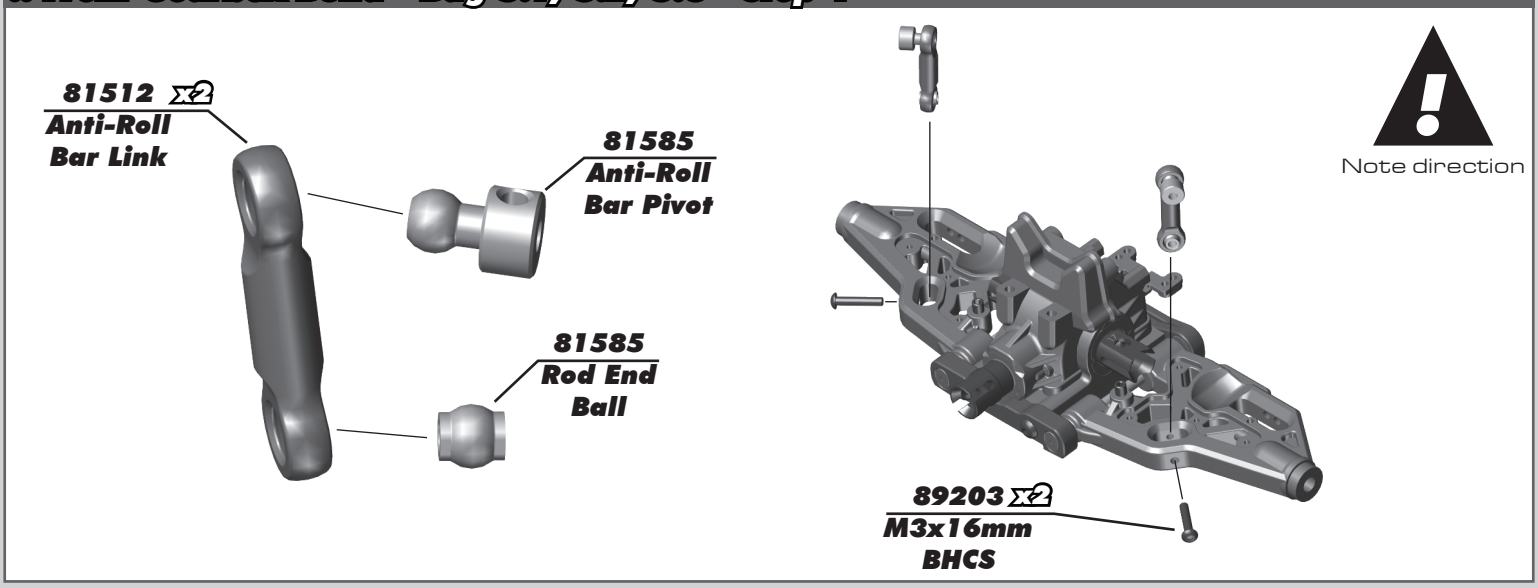

:: Front Gearbox Build - Bag 5.1, 5.2, 5.3 - Step 5

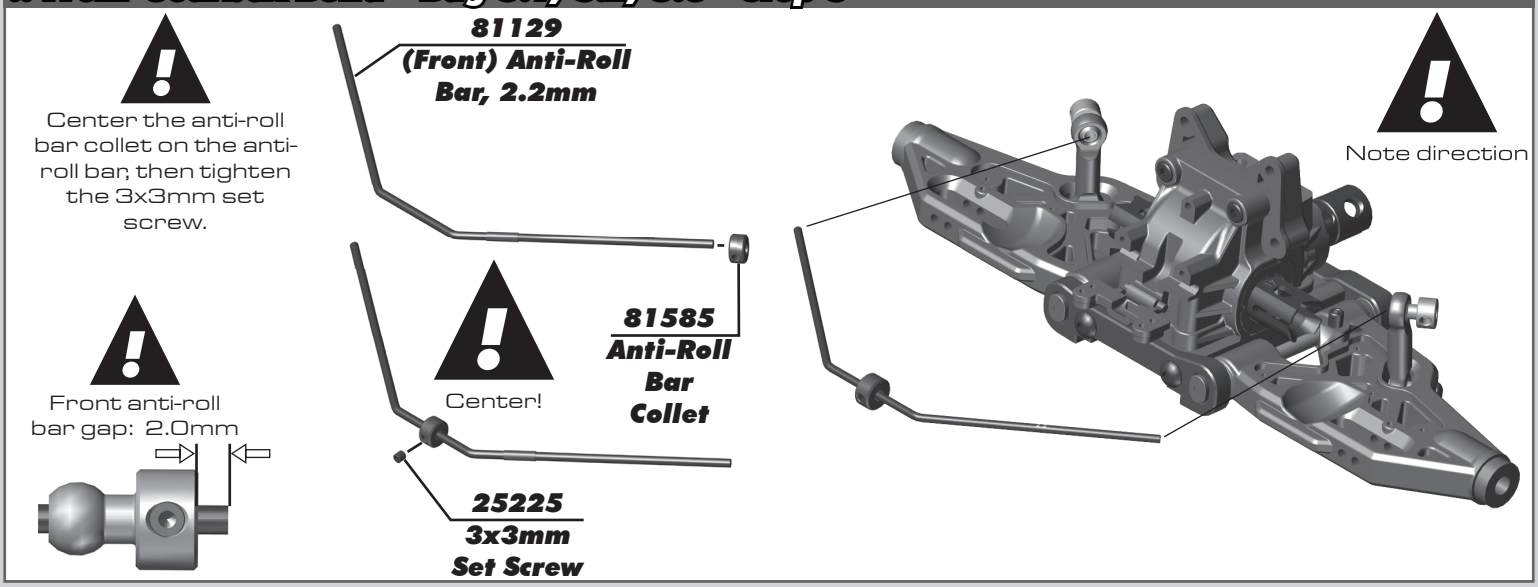

:: Front Gearbox Build - Bag 5.1, 5.2, 5.3 - Step 6

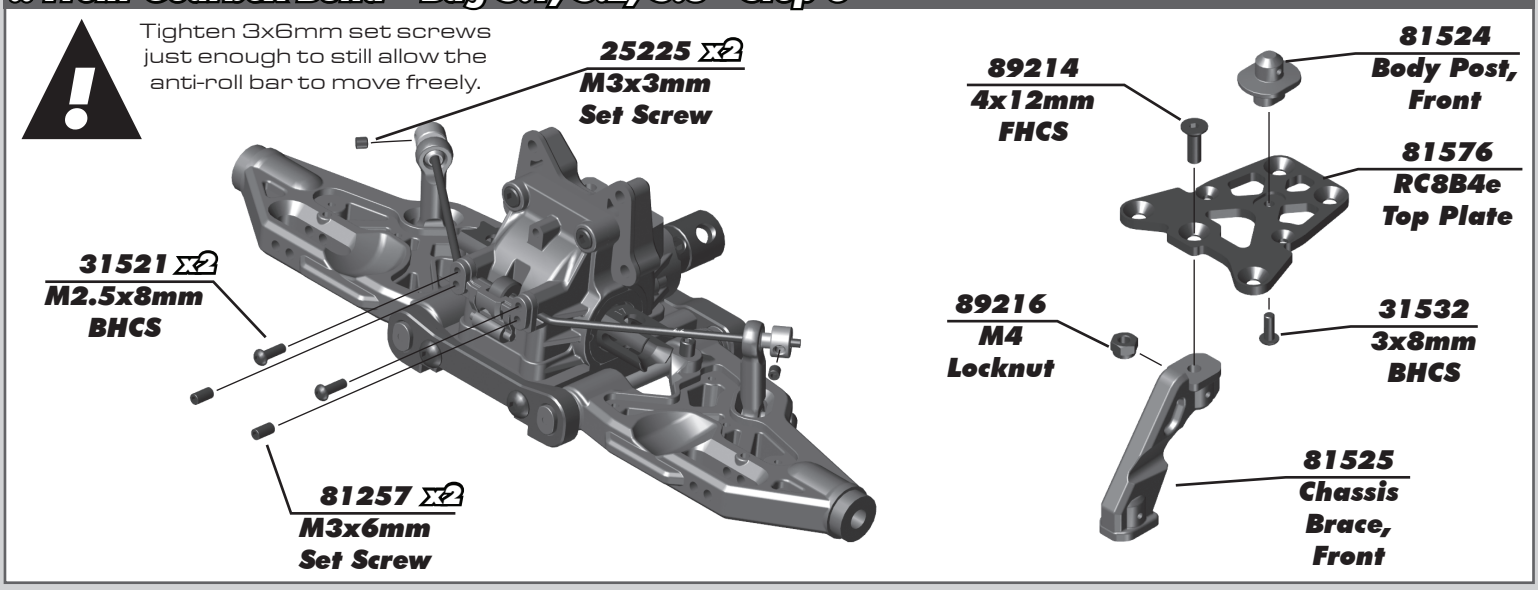

:: Front Gearbox Build - Bag 5.1, 5.2, 5.3 - Step 7

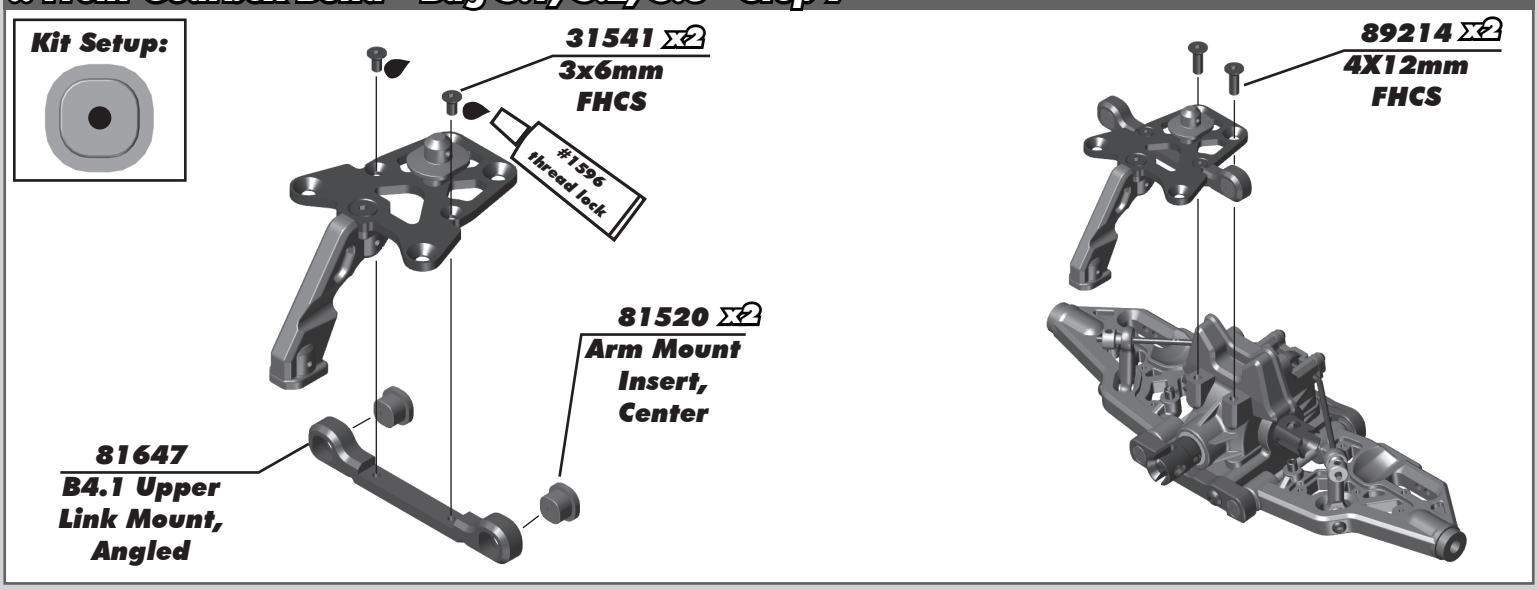

:: Front Gearbox Build - Bag 5.1, 5.2, 5.3 - Step 8

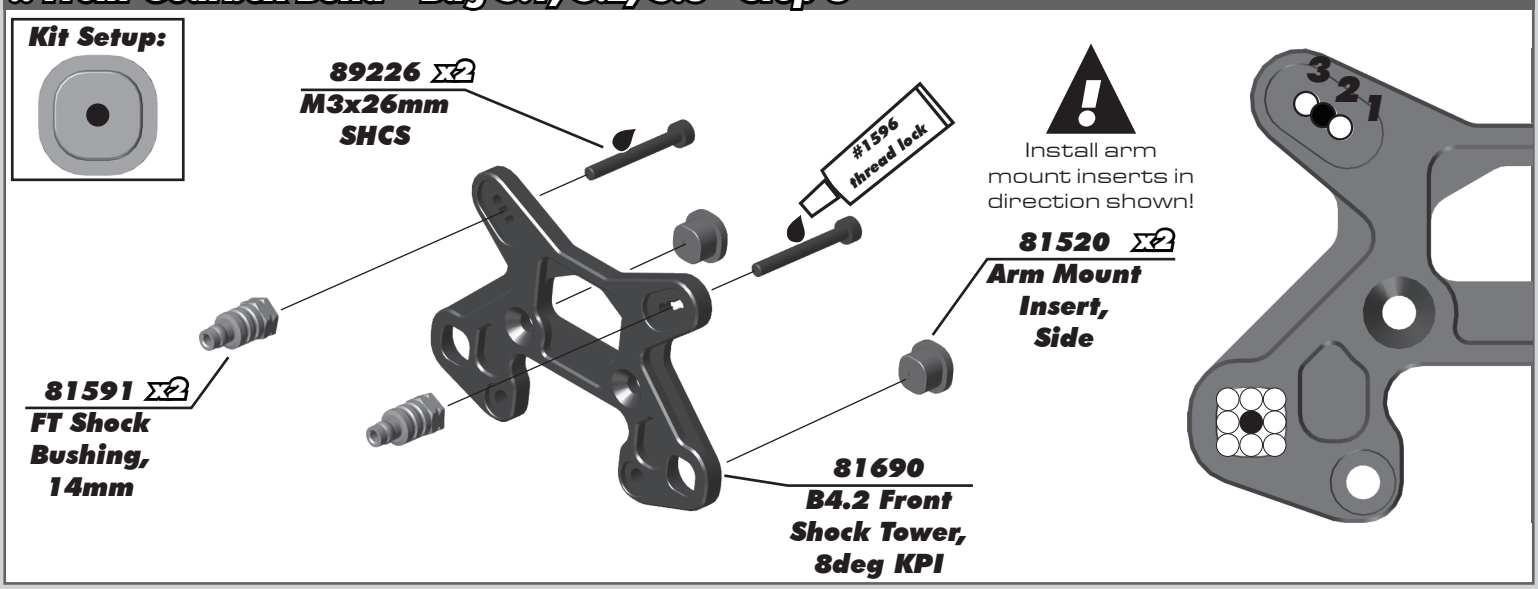

:: Front Gearbox Build - Bag 5.1, 5.2, 5.3 - Step 9

Build left and right side!

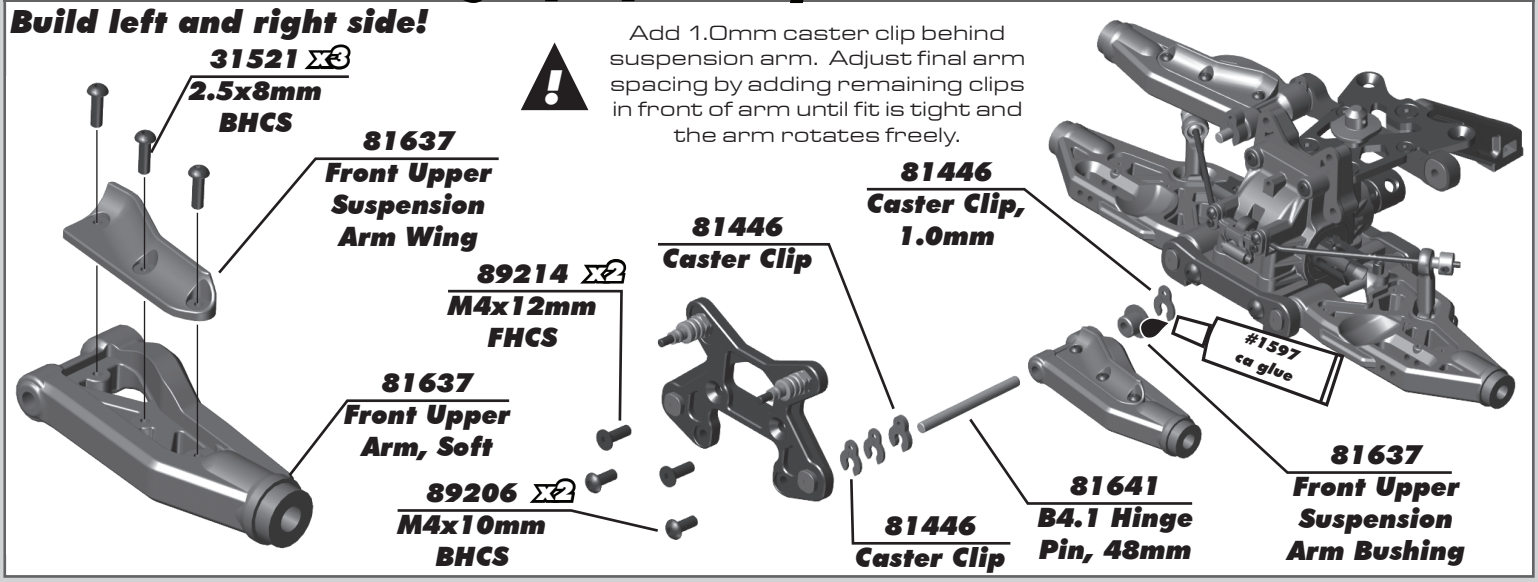

Add 1.0mm caster clip behind suspension arm. Adjust final arm spacing by adding remaining clips in front of arm until fit is tight and the arm rotates freely.

:: Steering Blocks Build - Bag 6.1 - Step 1

Build left and right side!

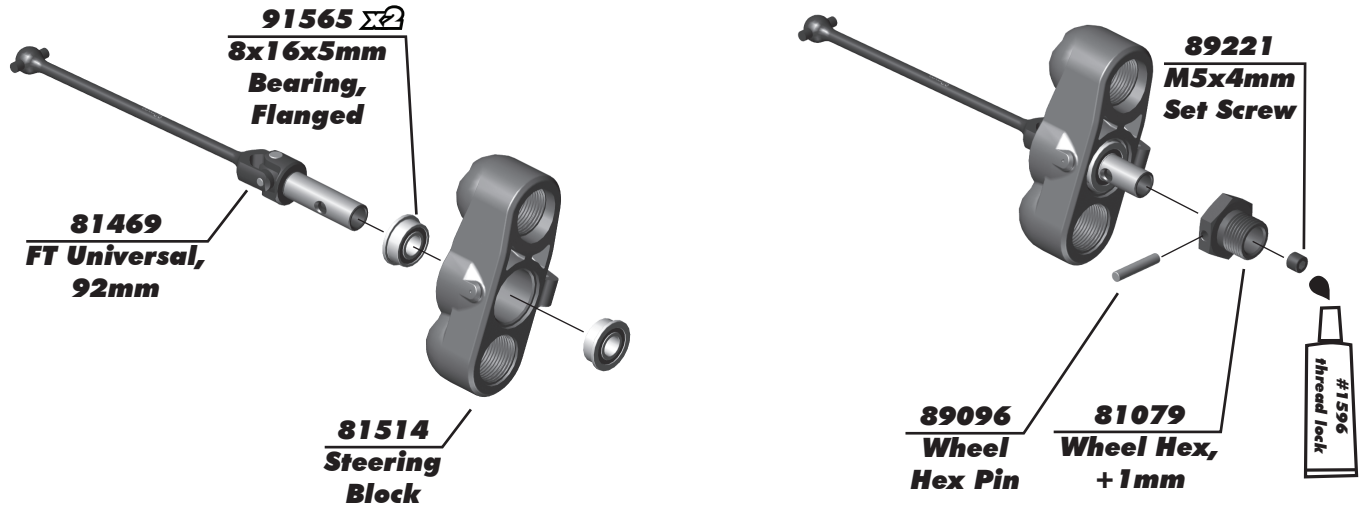

:: Steering Blocks Build - Bag 6.1 - Step 2

Build left and right side!

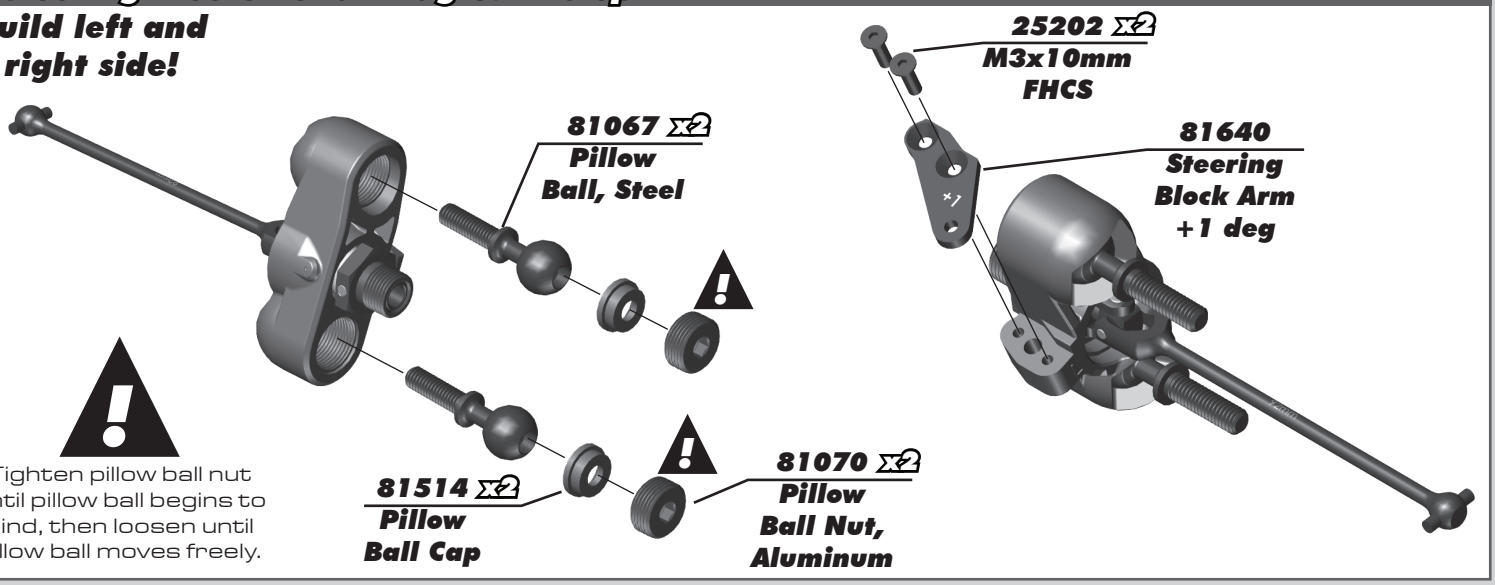

Tighten pillow ball nut until pillow ball begins to bind, then loosen until pillow ball moves freely.

:: Steering Blocks Build - Bag 6.1 - Step 3

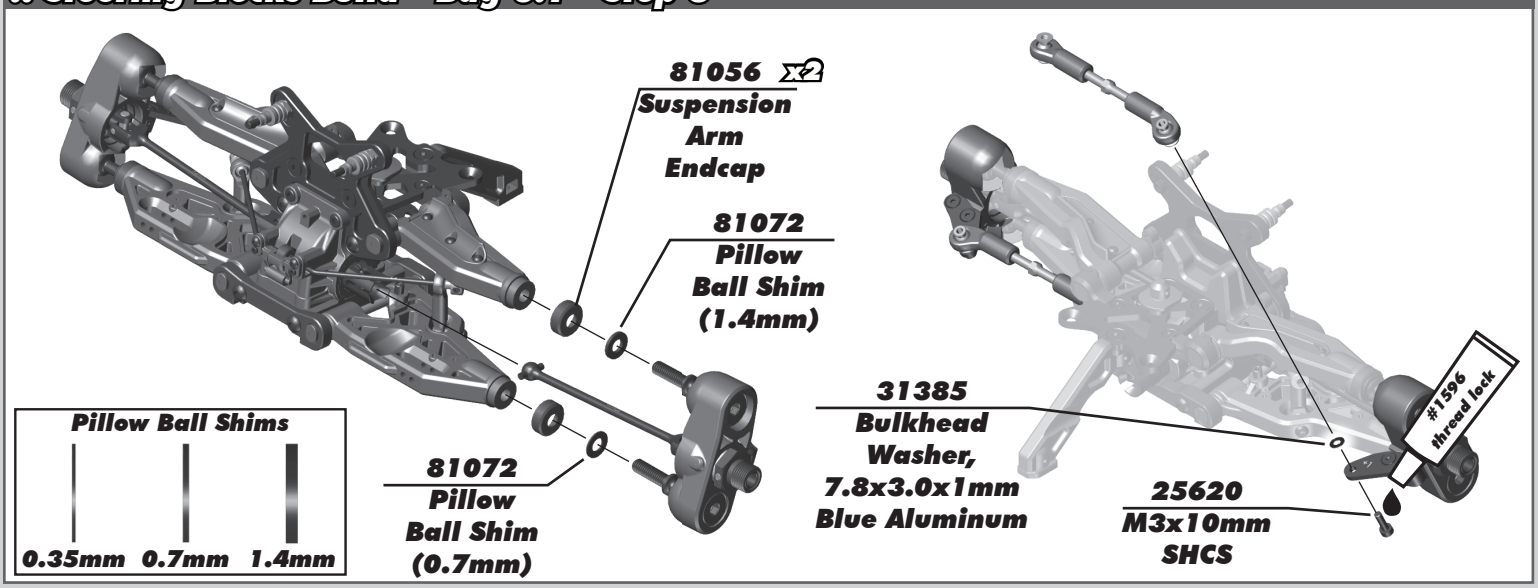

:: Steering Blocks Build - Bag 6.1 - Step 4

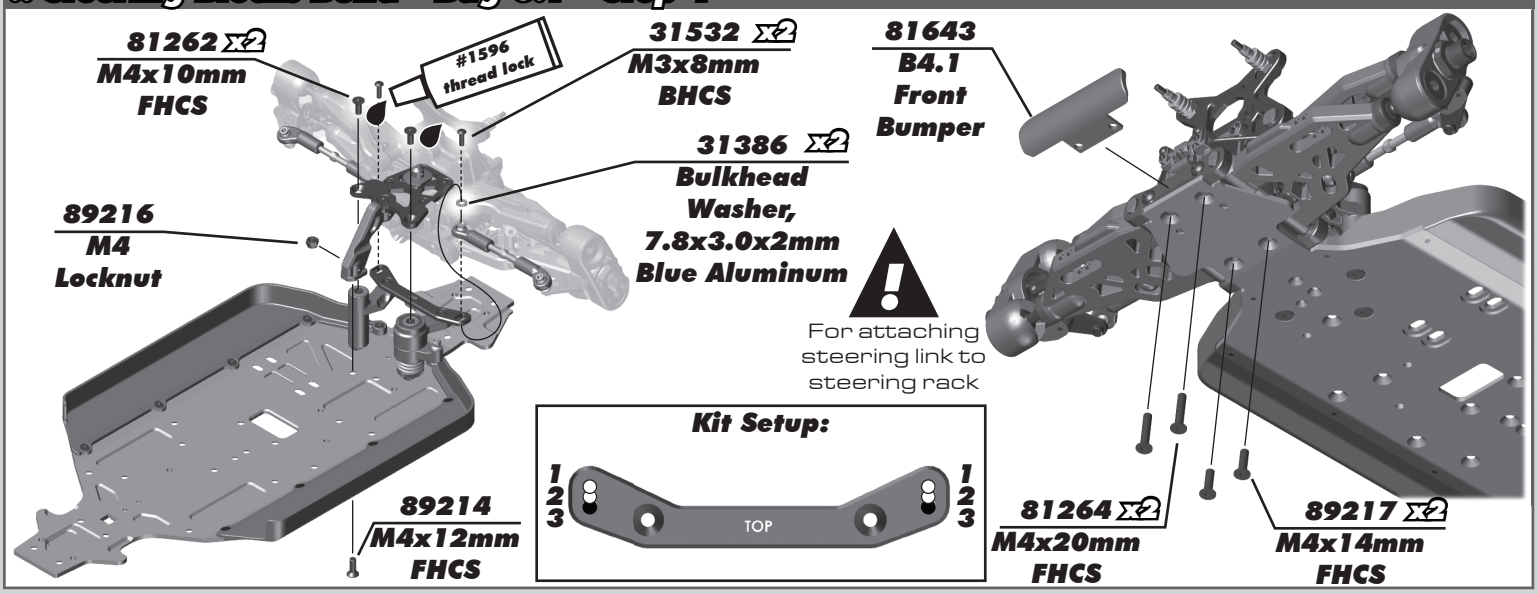

:: Steering Blocks Build - Bag 6.1 - Step 5

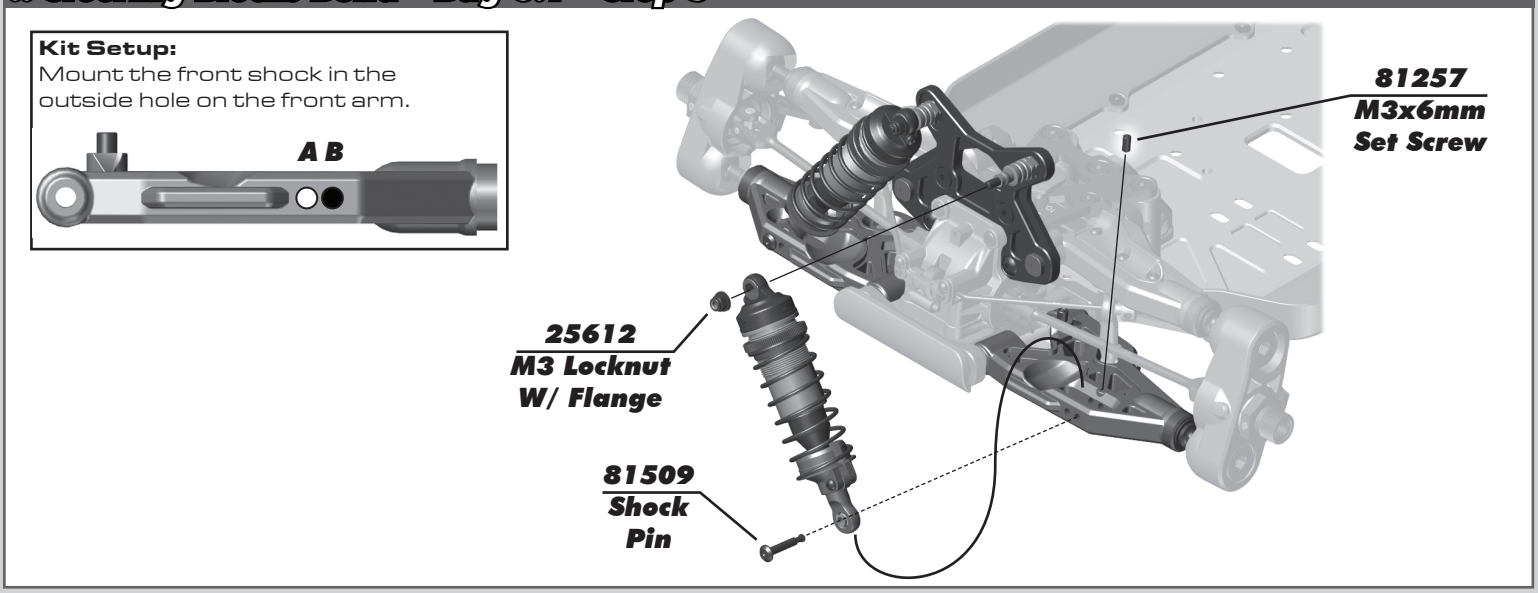

:: Rear End Build - Bag 7.1, 7.2, 7.3 - Step 1

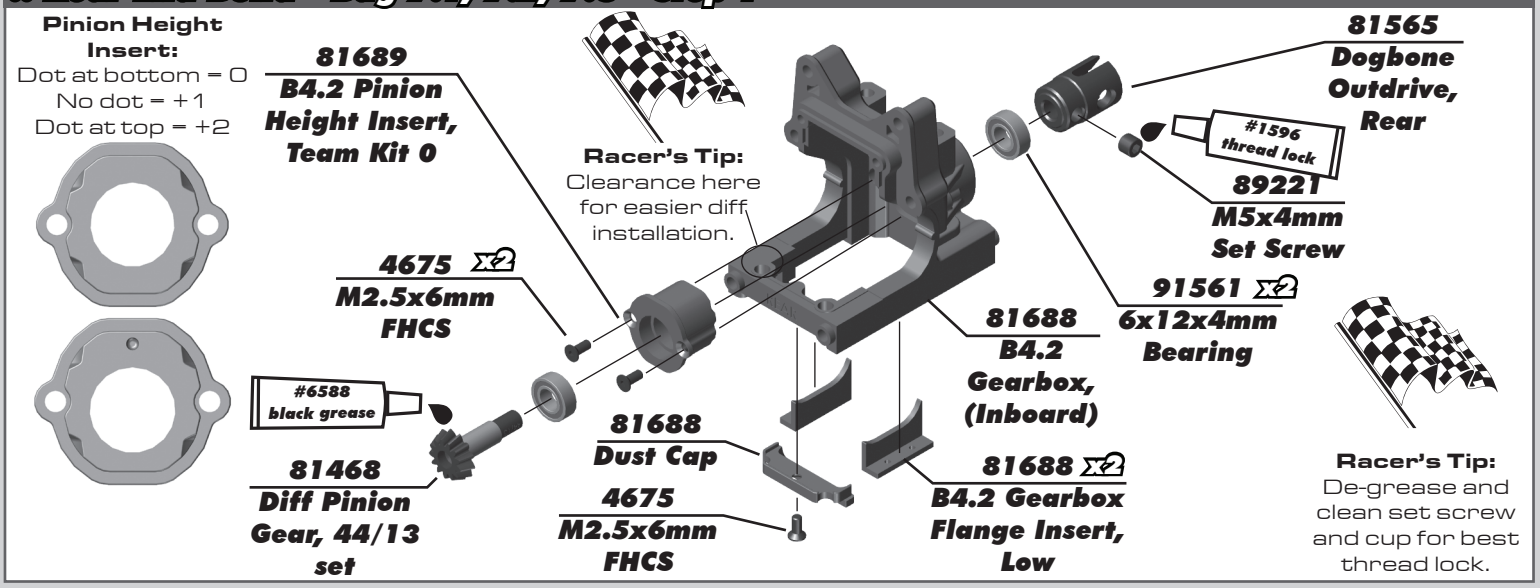

:: Rear End Build - Bag 7.1, 7.2, 7.3 - Step 2

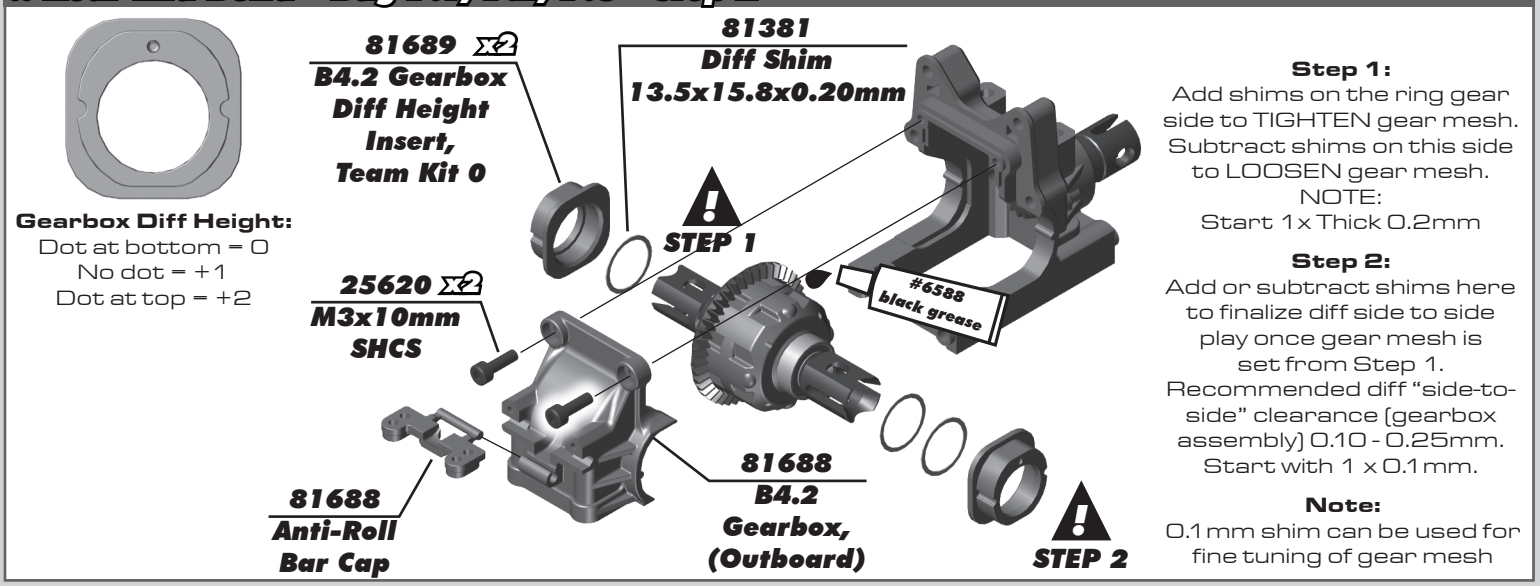

:: Rear End Build - Bag 7.1, 7.2, 7.3 - Step 3

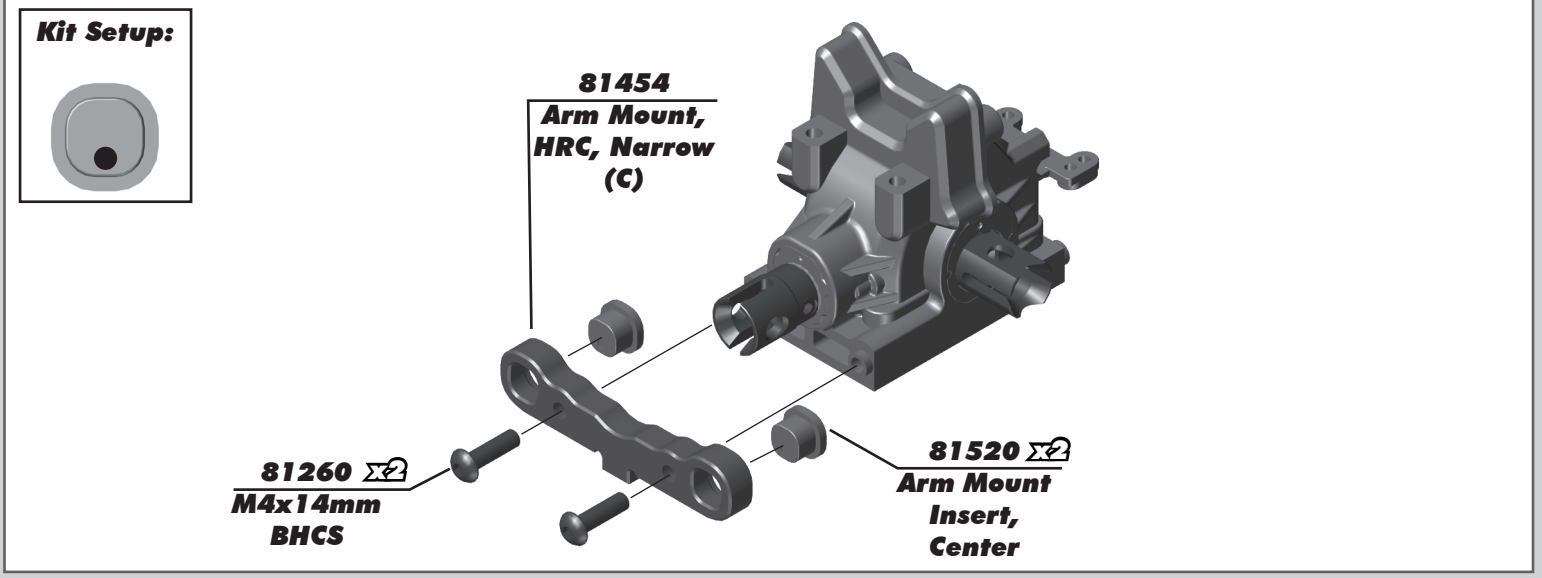

:: Rear End Build - Bag 7.1, 7.2, 7.3 - Step 4

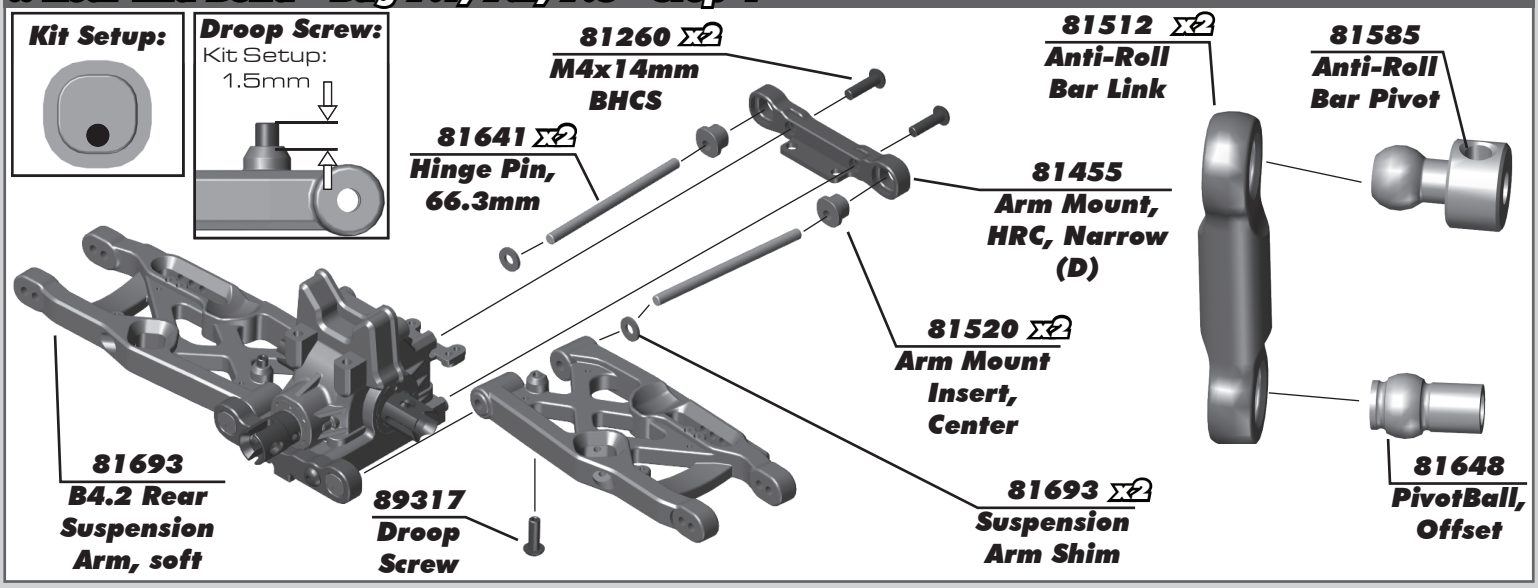

:: Rear End Build - Bag 7.1, 7.2, 7.3 - Step 5

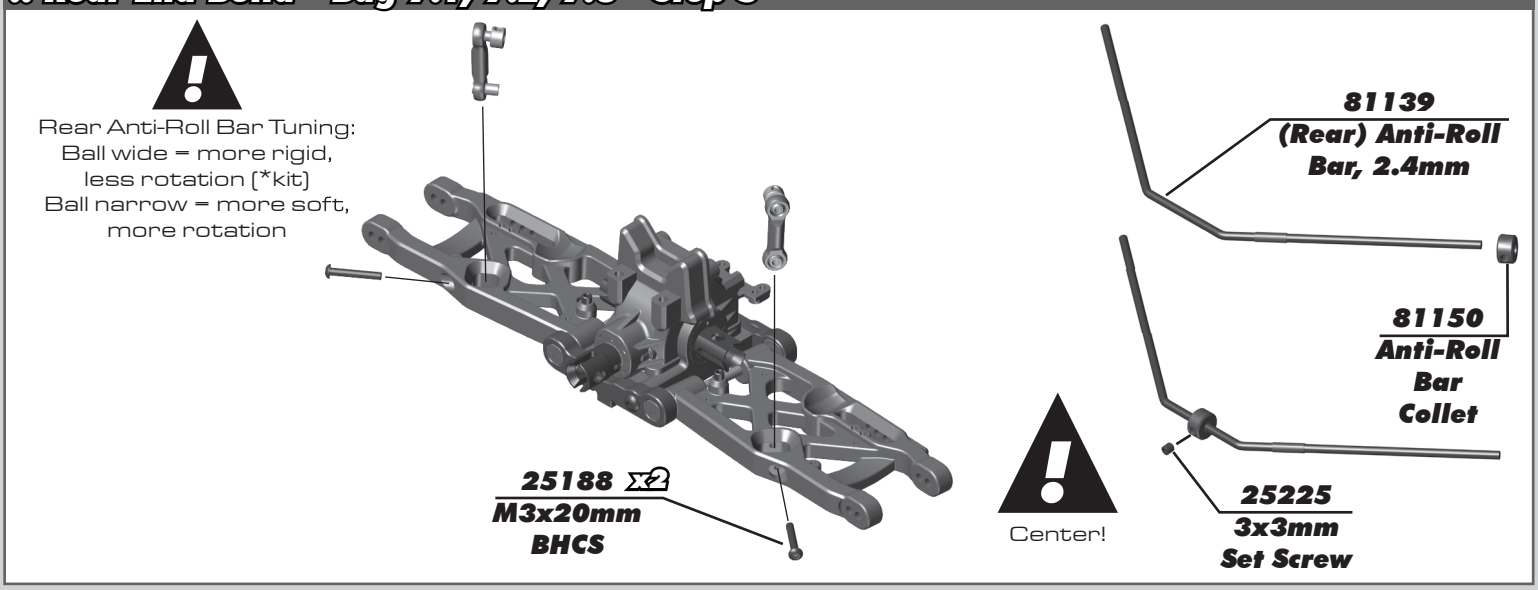

:: Rear End Build - Bag 7.1, 7.2, 7.3 - Step 6

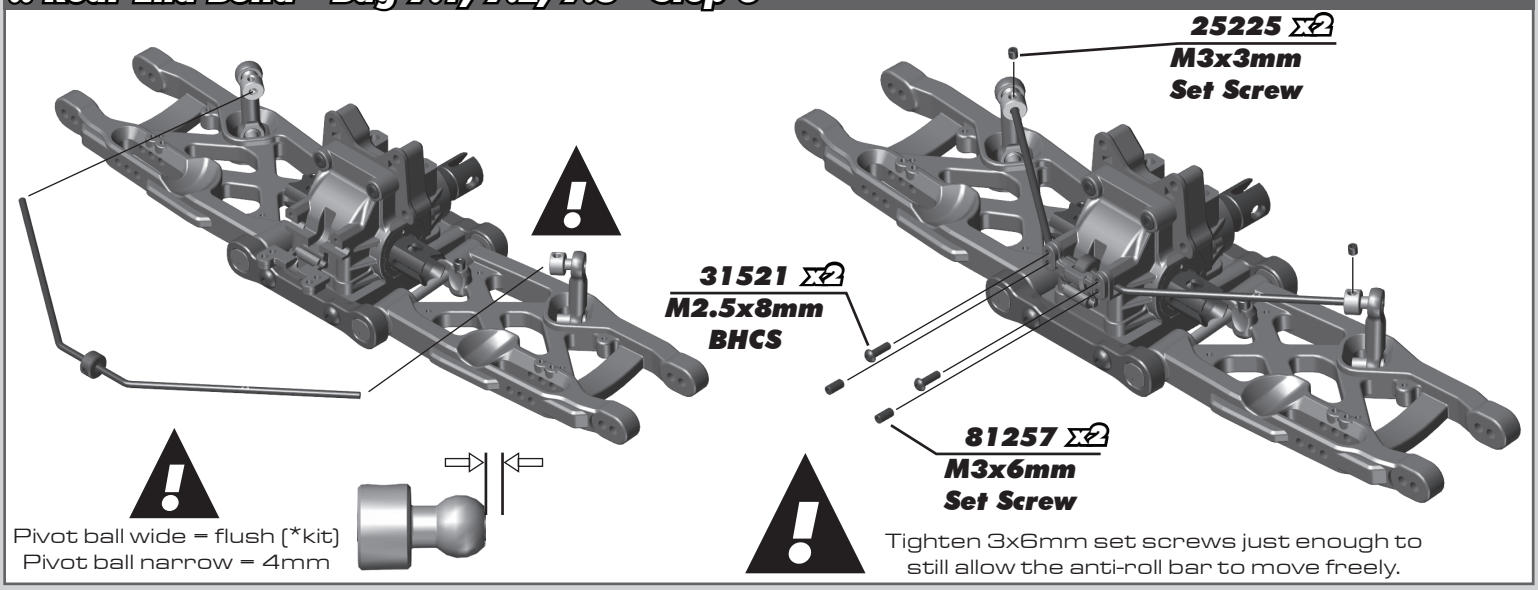

:: Rear End Build - Bag 7.1, 7.2, 7.3 - Step 7

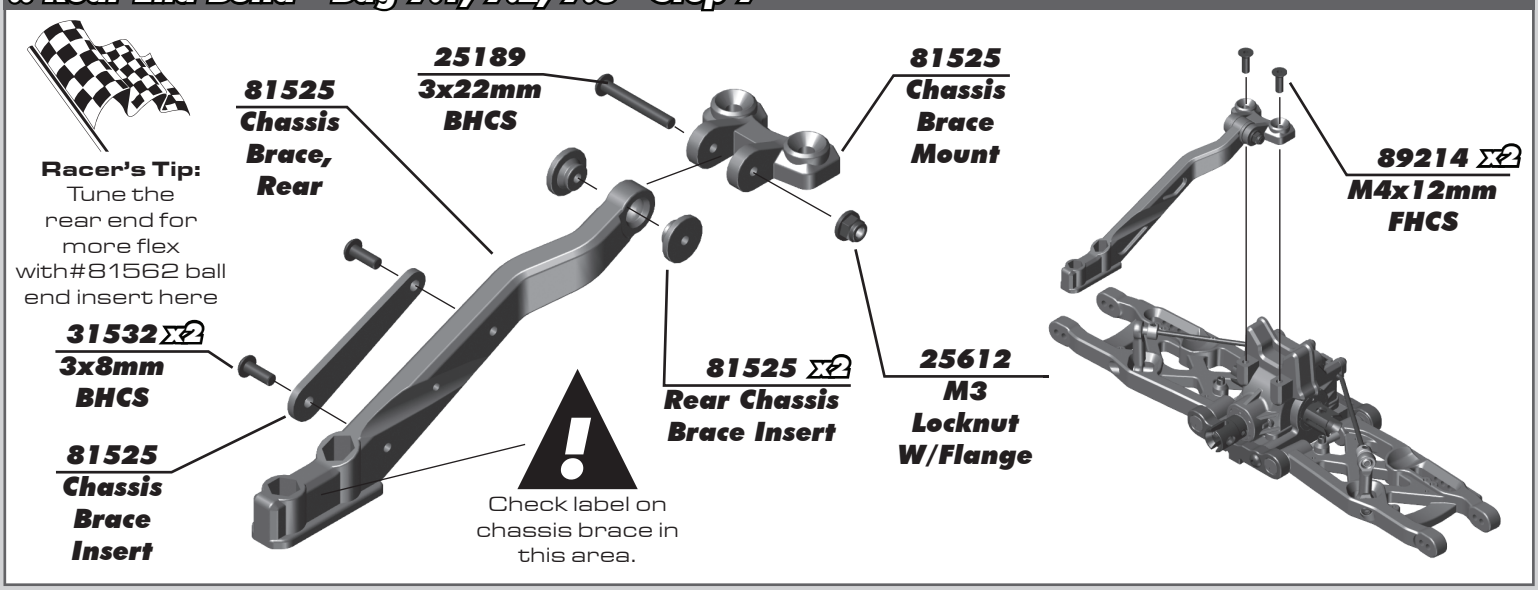

:: Rear End Build - Bag 7.1, 7.2, 7.3 - Step 8

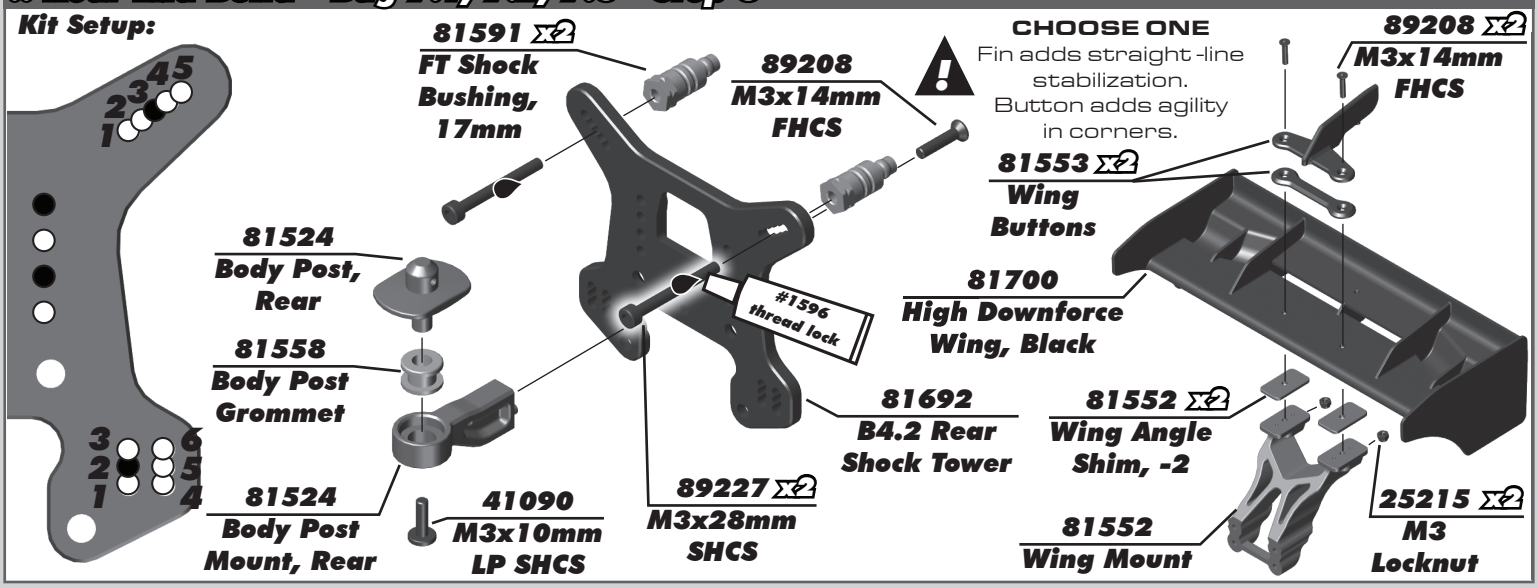

:: Rear End Build - Bag 7.1, 7.2, 7.3 - Step 9

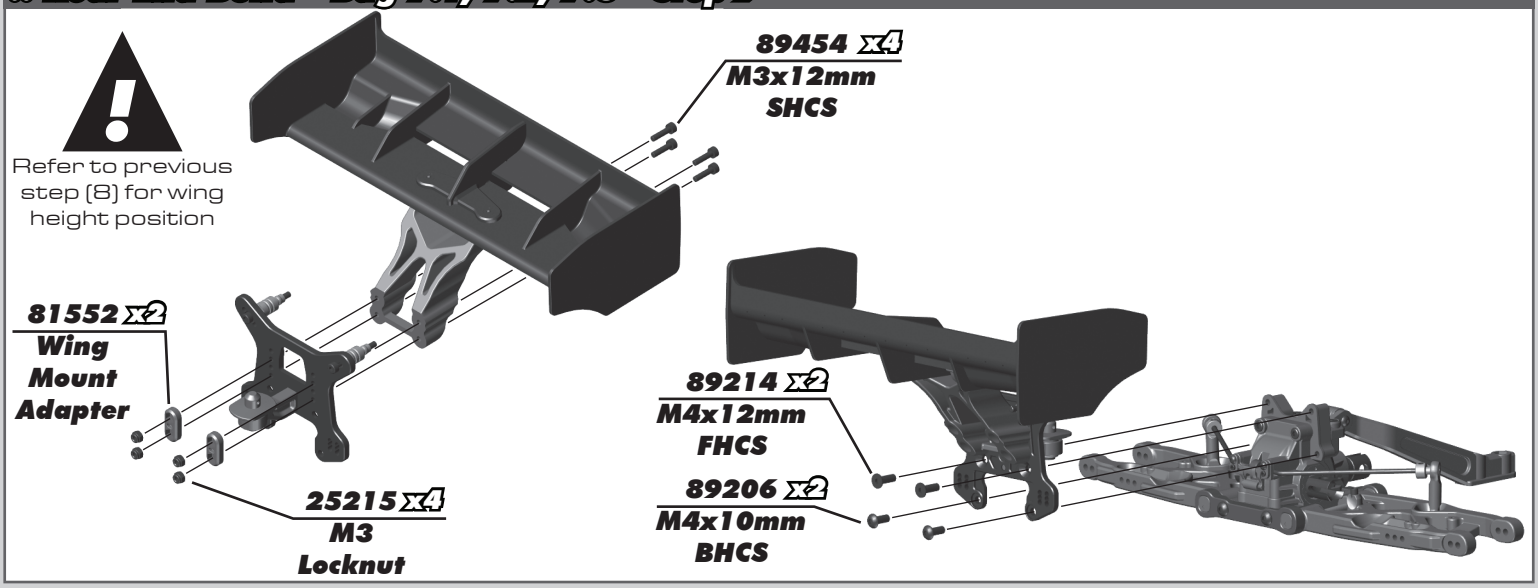

:: Rear Hubs Build - Bag 8.1, 8.2 - Step 1

Build two!

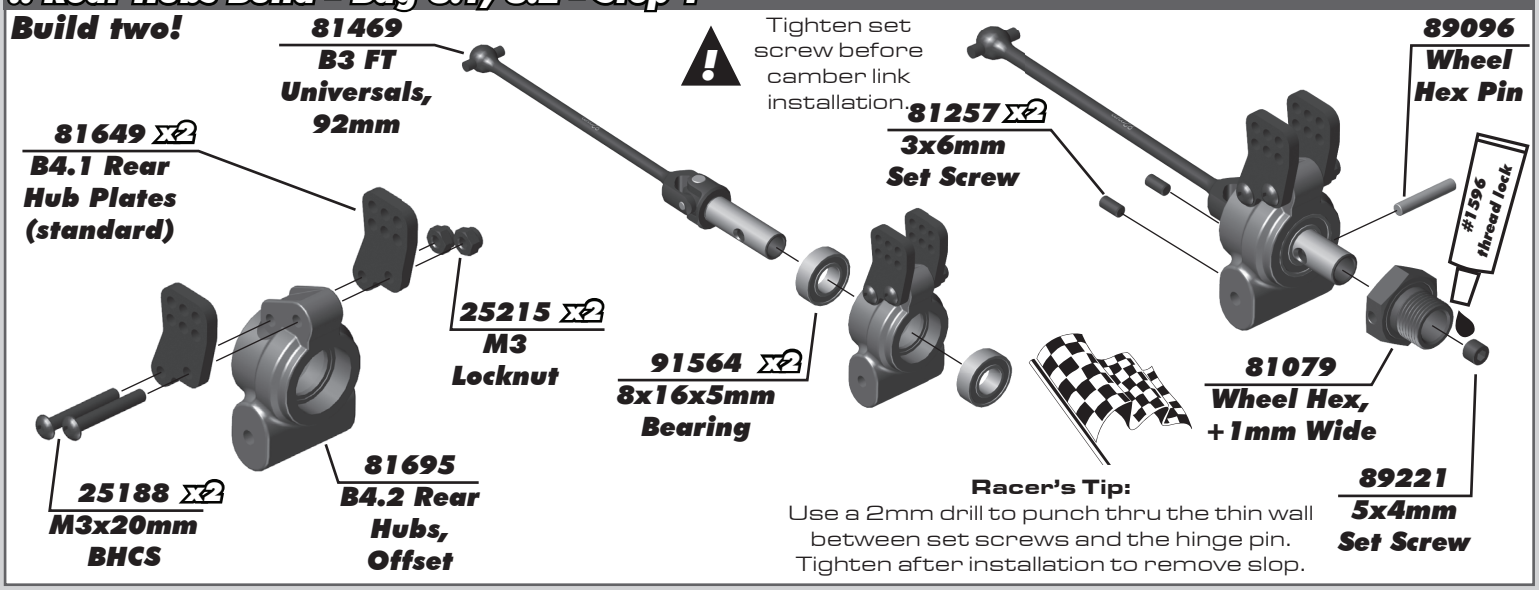

Racer's Tip:
Use a 2mm drill to punch thru the thin wall between set screws and the hinge pin. Tighten after installation to remove slop.

:: Rear Hubs Build - Bag 8.1, 8.2 - Step 2

Install left and right side!

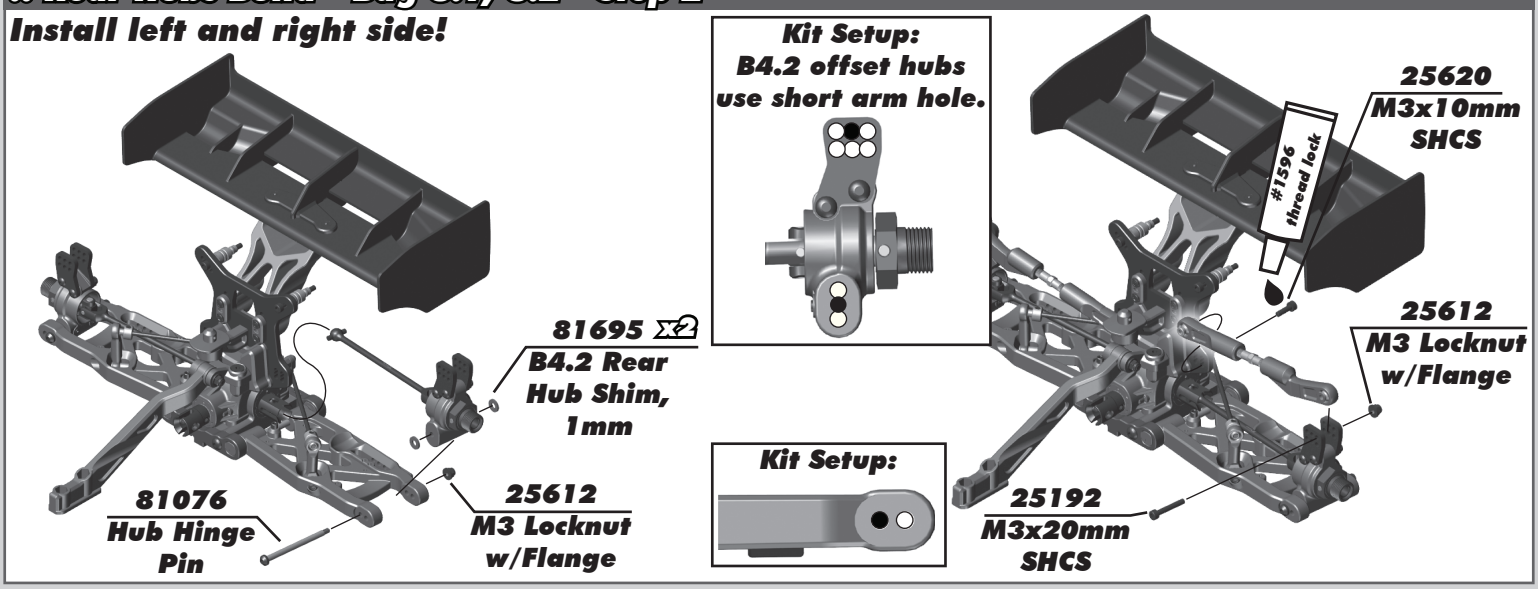

:: Rear Hubs Build - Bag 8.1, 8.2 - Step 3

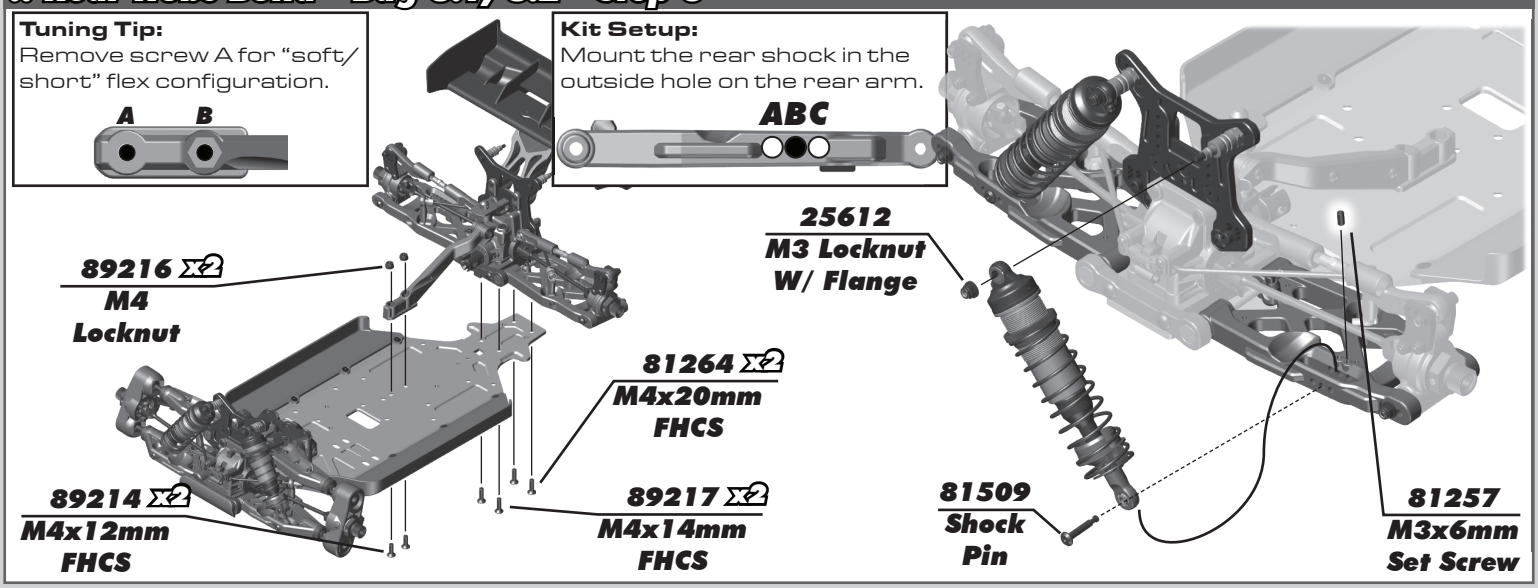

:: Center Bulkhead - Bag 9.1 - Step 1

Note: Do not use brake rotor guides on center bulkheads

Motor Direction on ESC to Reverse

Weight Bias Setting	FWB	RWB
Center Diff Adapter Position	FWD	RWD
Motor Clamp Position	FWD	RWD
Front Dogbone Shaft (mm)	96.5	104
Rear Dogbone Shaft (mm)	104	96.5

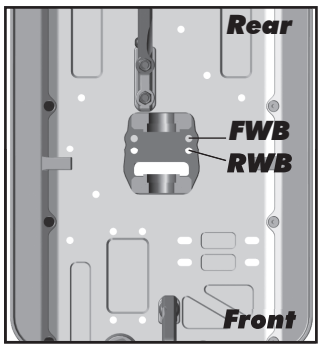

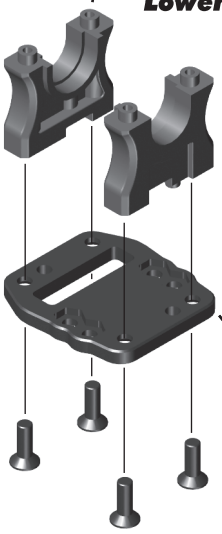

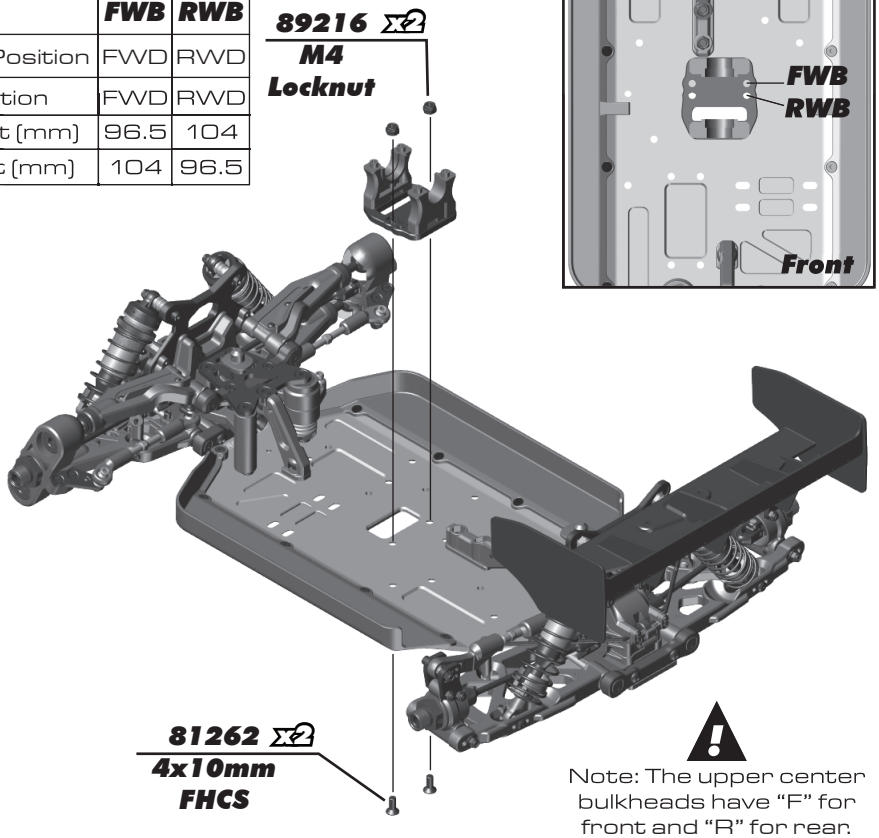

Note: The upper center bulkheads have "F" for front and "R" for rear.

:: Center Bulkhead - Bag 9.1 - Step 2

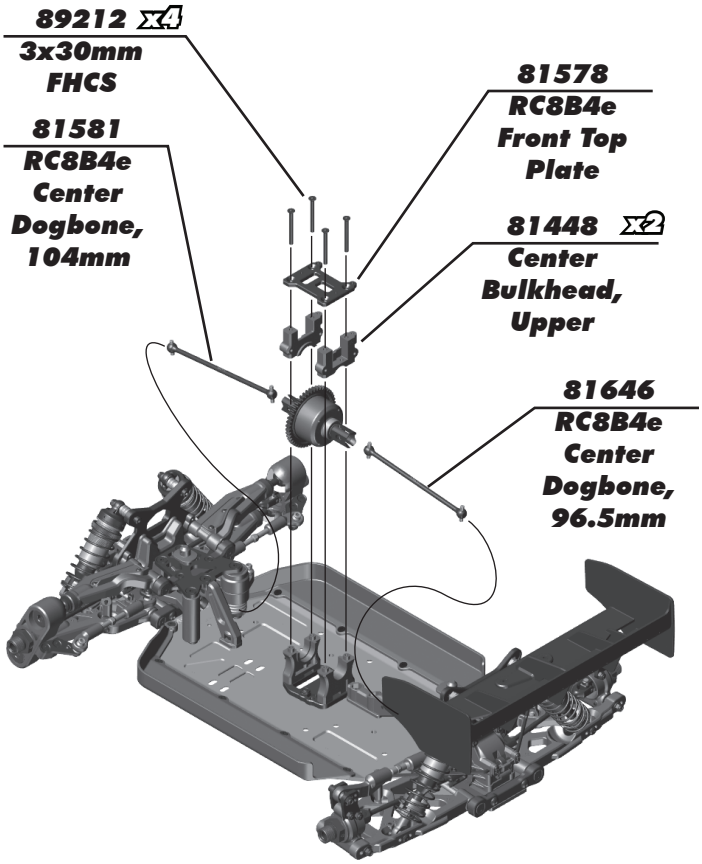

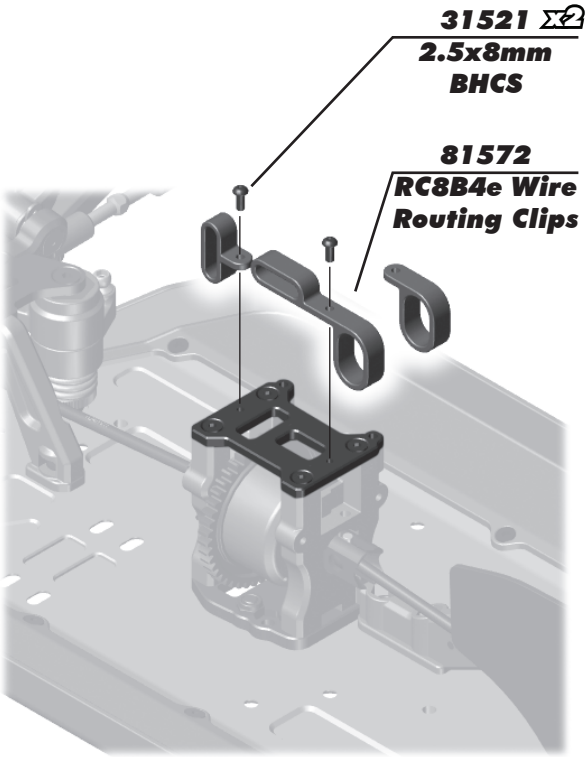

:: Center Bulkhead - Bag 9.1 - Step 3

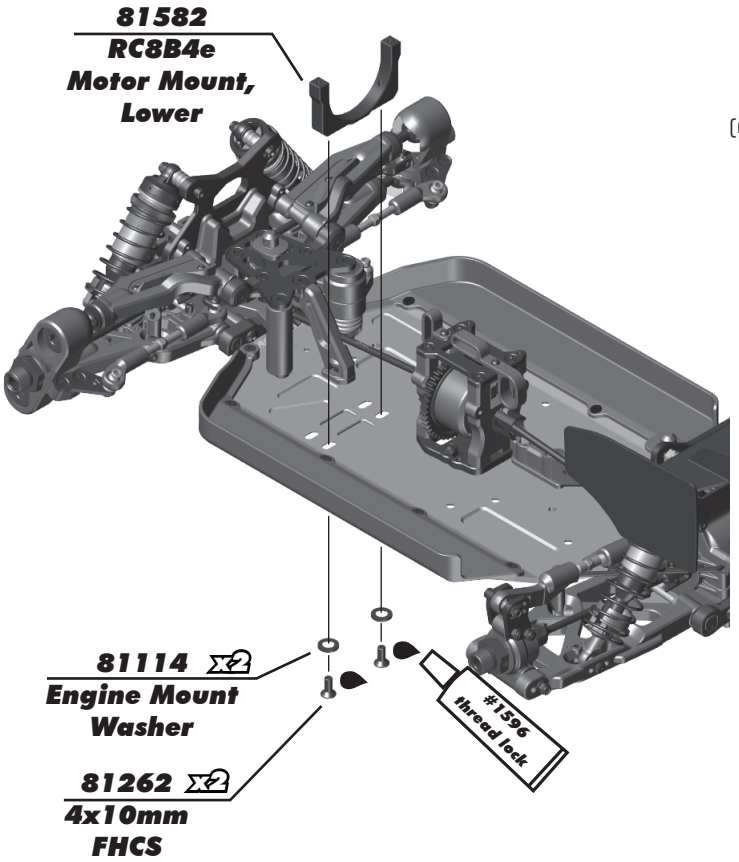

Optional!
30mm fan
(not included)

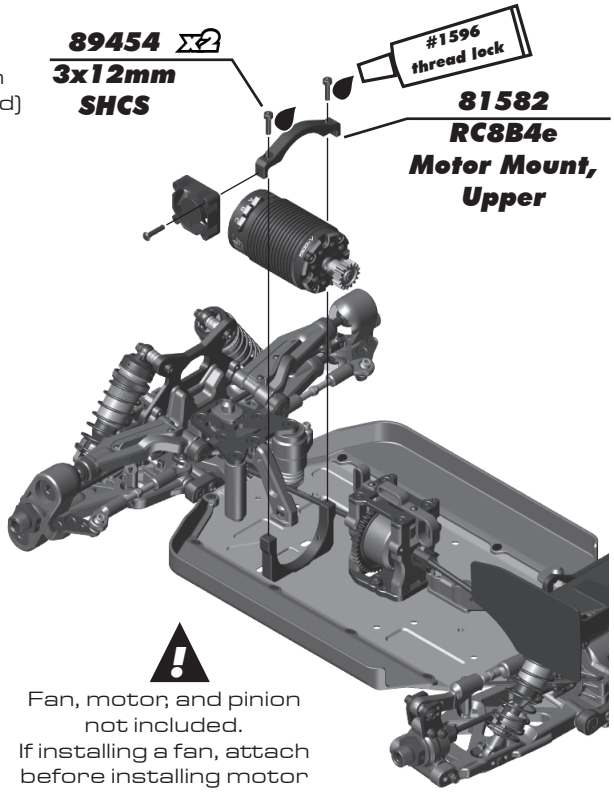

Fan, motor, and pinion
not included.
If installing a fan, attach
before installing motor
mounts.
Hardware not included.
Maximum screw depth 4mm.

:: Radio Tray Build - Bag 10.1, 11.1 - Step 1

Install servo
splines toward
front of buggy!

(not included)

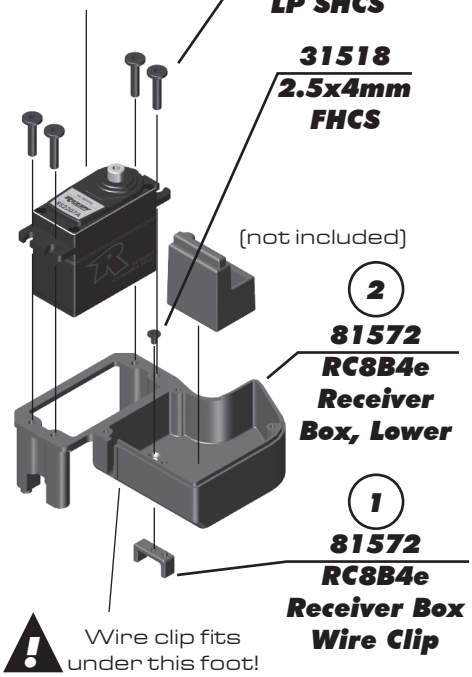

Wire clip fits
under this foot!

Install servo mount wire clip
1 st, then the receiver box to
the chassis

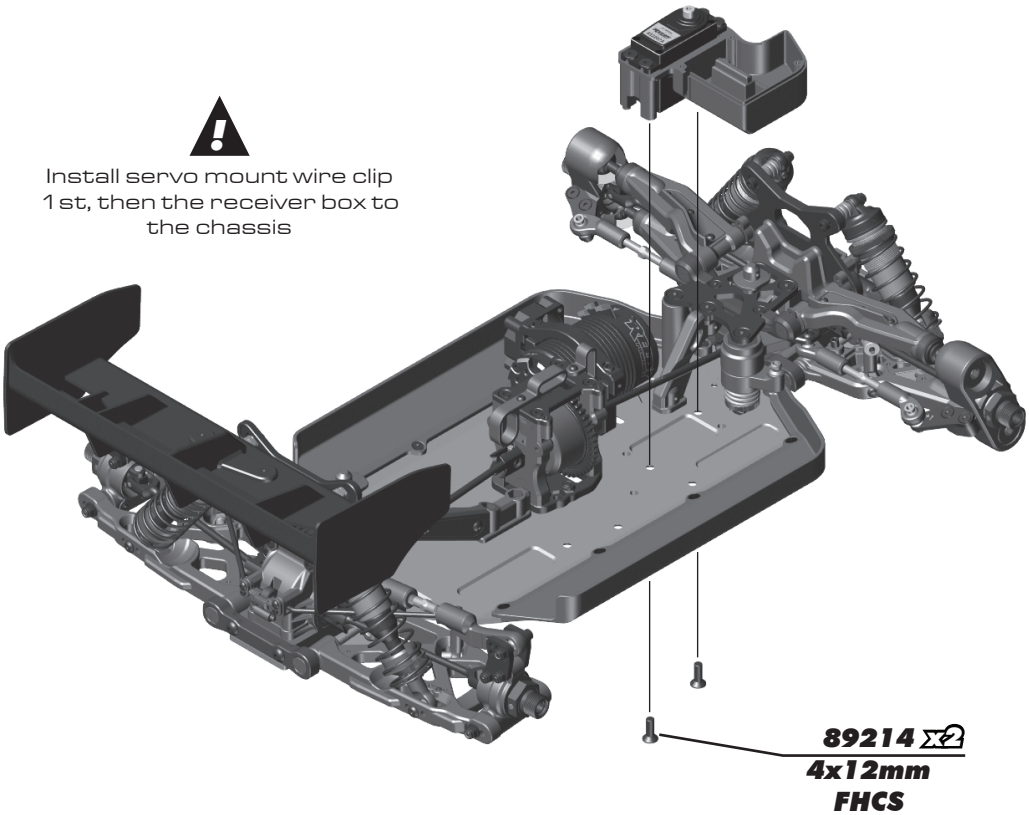

:: Radio Tray Build - Bag 11.1 - Step 2

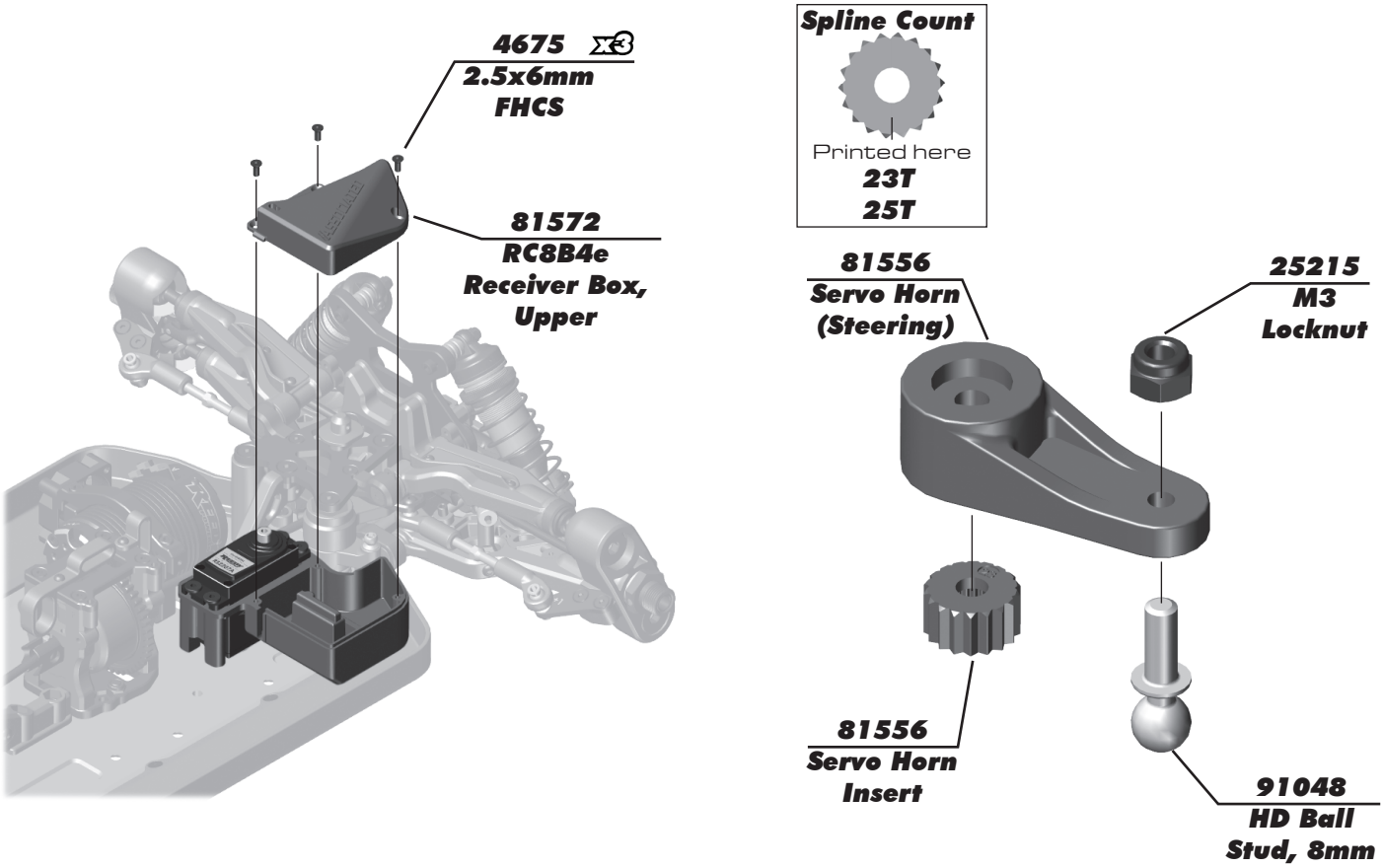

:: Radio Tray Build - Bag 11.1 - Step 3

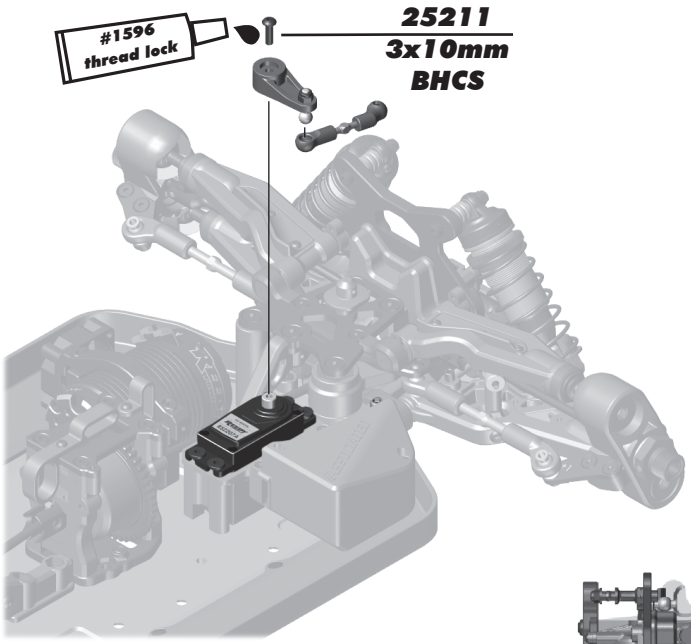

To build RC8B4.2e for use with two 2s shorty battery packs in a "saddle" configuration, follow the steps below.

To build RC8B4.2e for use with one 4s shorty battery pack, continue to "Battery Tray Build - Bag 12.1 - Step 2"

2s Shorty Pack Configuration

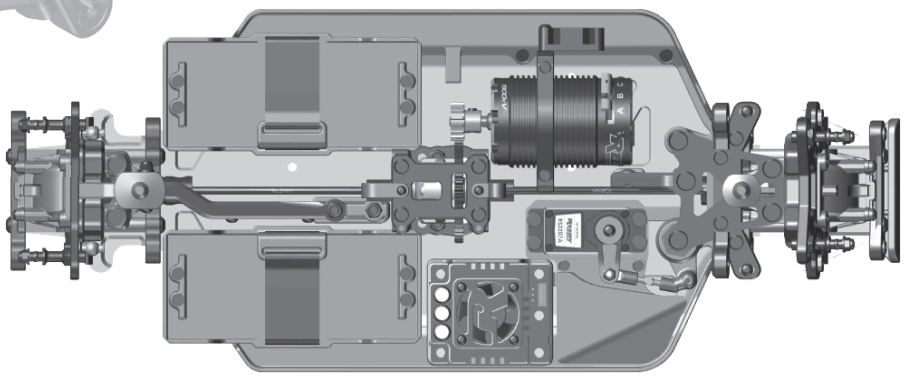

:: Battery Tray Build - Bag 12.1 - Step 1

!!!ALERT!!!
ESC Setup needs motor rotation = REV
Reverse Motor Rotation only

Reverse ESC in program box

(not included)

6727 Servo Tape

81572 ESC Tray

81262 x2 4x10mm FHCS

81584 Hook and Loop Strap

81574 x2 Battery Tray Spacer

25201 x4 3x8mm FHCS

81574 Battery Tray

89216 x4 M4 Locknut

Use 2s shorty battery only

81262 x4 4x10mm FHCS

:: Battery Tray Build - Bag 12.1 - Step 2

89216 x2 M4 Locknut

(ESC not included)

6727 Servo Tape

81572 ESC Tray

81262 x4 4x10mm FHCS

!! ALERT !!
4s Shorty pack configuration does not fit with the kit body (#81568).

Fits with optional brand bodies that clear the taller cell configuration.

Use 4s shorty battery only

4s Shorty Pack Configuration

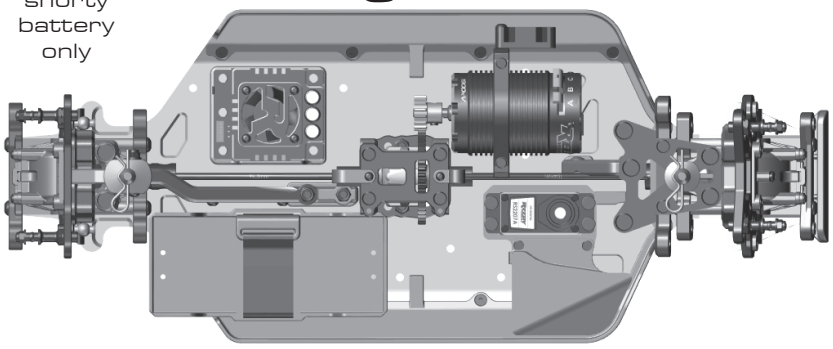

:: Wheels / Tires / Body - Misc. - Step 2

Install wheel nuts with the serrated edge towards the wheel.

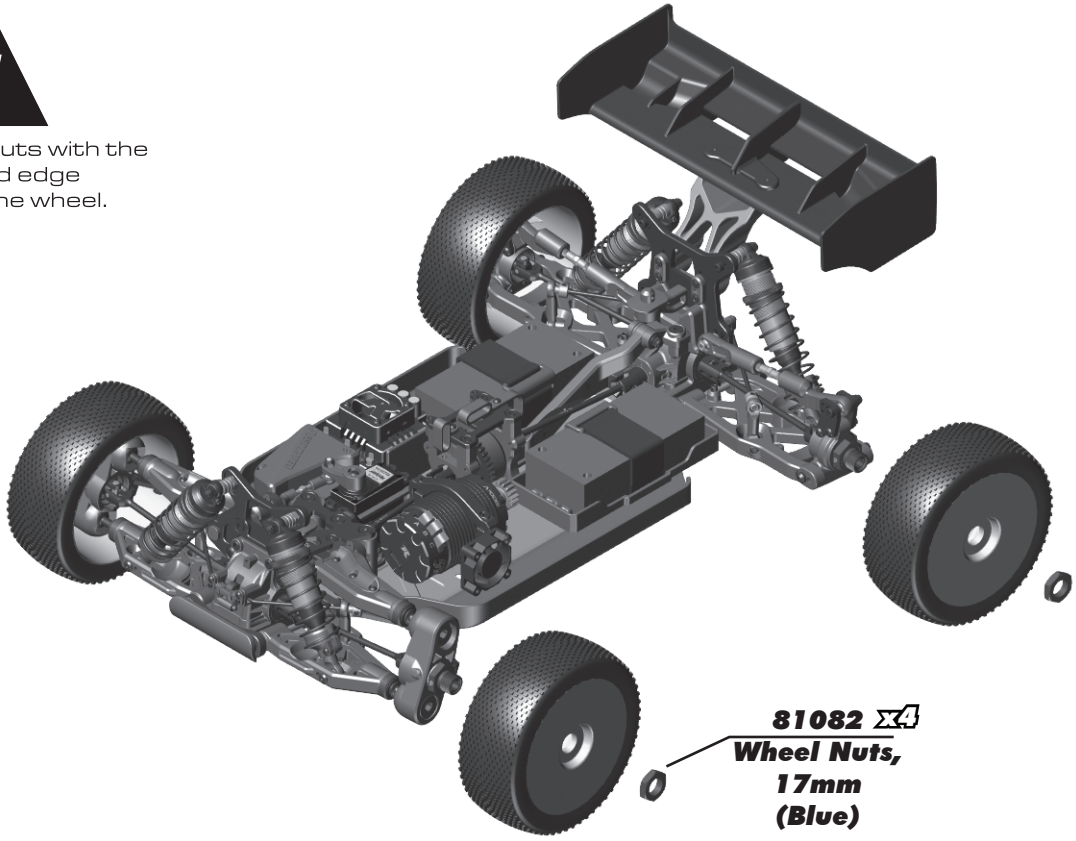

:: Wheels / Tires / Body - Misc. - Step 3

Final chassis ride height.
Front = 23mm
Rear = 26mm

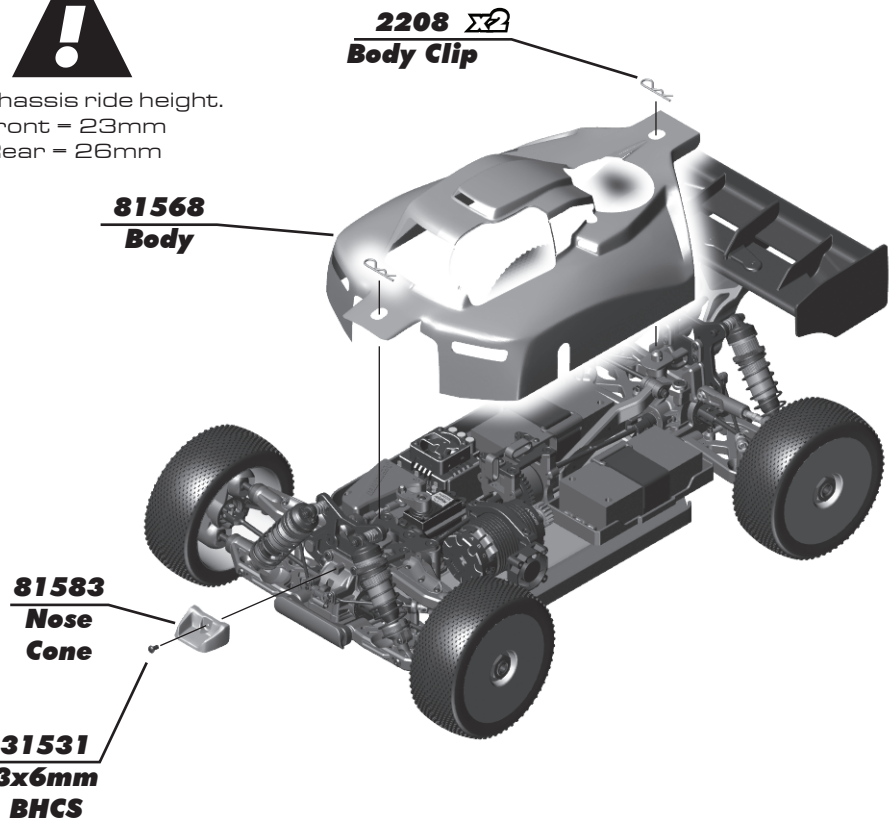

Painting Tips:

Your kit comes with a clear polycarbonate body. You will need to prep the body before you can paint it. Wash the inside thoroughly with warm water and liquid detergent. Dry the body using a clean, soft, lint-free cloth. Install the window masks on the inside of the body. (R/C cars get painted from the inside). Using high quality masking tape, apply tape to the inside of the body to create a design. Spray (either rattle can or airbrush R/C specific paint) the paint to the inside of the body (prefferably dark colors first, lighter colors last).

NOTE: use ONLY paint that is recommended for use with (polycarbonate) plastics. If you do not, you can destroy the polycarbonate body!!!

After painting, cut the body along the trim lines. Make sure to drill or use a body reamer to make the holes for the body mounts and antenna!

:: Droop Settings

Set droop by measuring overall length of shock (from standoff to shock pin) while the chassis is elevated above your working surface. The shocks should be fully extended.
Kit setup for front droop is 101 mm shock length, and 126mm shock length for the rear using "C" hole.
If the shock length is too long, adjust by turning the droop screws clockwise.
If the shock length is too short, adjust by turning the droop screws counter-clockwise.

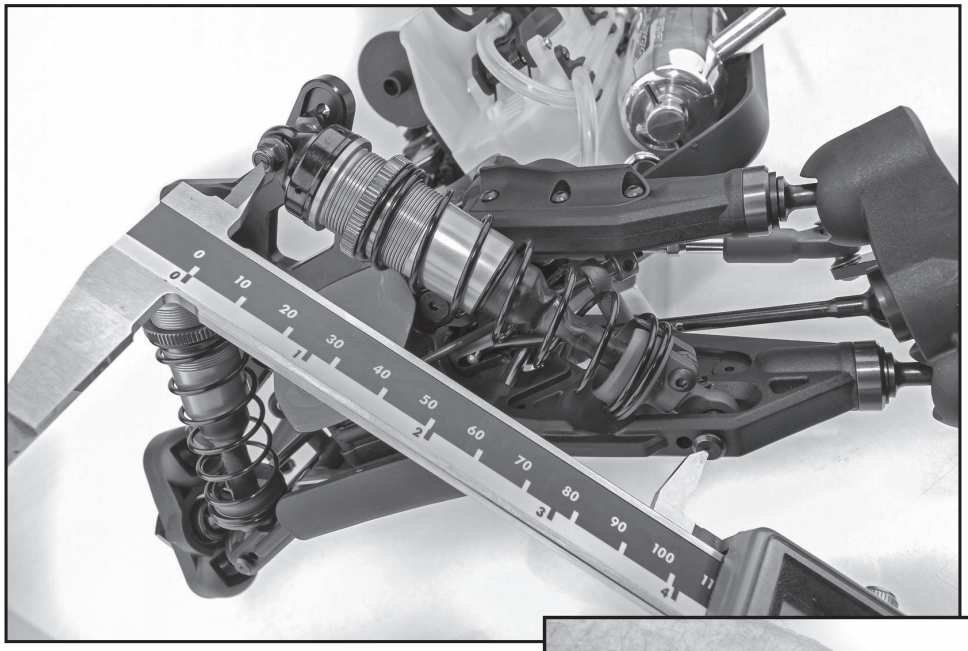

Racer's Tip:
Use 123mm for the middle "B" rear arm hole, and +2 or 0 eyelet.

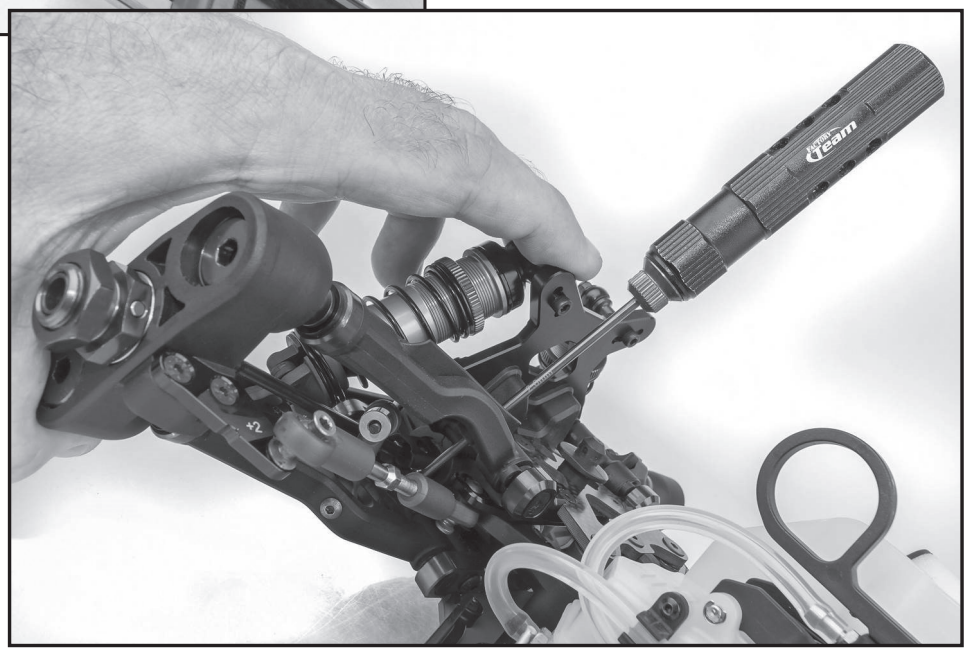

Front Droop: Increasing front droop (loosen droop screws) will increase off-throttle steering. It also allows the front end to lift more, giving more rear grip and less front grip on-power. Remember to never loosen the screws beyond the FULL DROOP setting. Decreasing front droop (tighten droop screws) yields more on-power steering and quicker response at the expense of some stability in bumpy sections. It will also give less off-throttle steering.

Rear Droop: Increasing rear droop (loosen droop screws) will increase traction in bumpy sections, but will reduce high-speed stability. Remember to never loosen the screws beyond the FULL DROOP setting. Decreasing rear droop (tighten droop screws) will increase stability in high speed sections, but will reduce stability in bumpy sections.

Setup Sheets:
To find different setups for your kit, visit our website, https://www.associatedelectrics.com/teamassociated/and click on the "Setup Sheets" link, and then the link to your model. Our team of professional drivers help develop these setups at races worldwide. Additionally, most drivers have a "base" setup that they use as a starting point for most races. Try running some of our base setups or look for track conditions and tires that are similar to your local track and replicate that setup. Remember, each adjustment has a purpose, so copy everything from the setup sheet and then make adjustments based on the recommendations in here.

ASSOCIATED ELECTRICS
Since 1964

Associated Electrics, Inc.
21062 Bake Parkway Lake Forest, CA 92630 USA

call: (949) 544-7500 - fax: (949) 544-7501

Check out the following web sites for all of our kits, current products, new releases, setup help, tips, and racing info!

www.AssociatedElectrics.com

FOLLOW US ON SOCIAL MEDIA

TeamAssociated	@TeamAssociatedRC	@Team_Associated	@Associated_Electrics	TeamAssociatedRC	TeamAssociated
ReedyPower	@ReedyPower	@ReedyPower		ElementRC	Reedy
ElementRC	@Element_RC				Element-rc
FactoryTeam51	@FactoryTeam_RC				